Installation and Maintenance Manual

FireDETEC® Compact Line System EN

(Additional languages available online at www.rotarexfiretec.com)

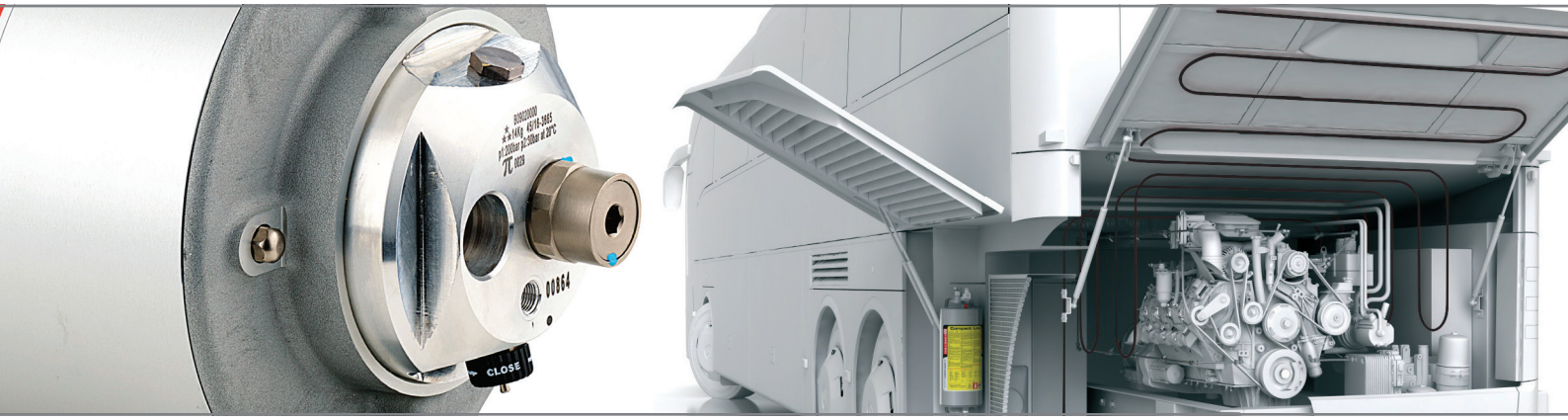

This Installation and Maintenance Manual applies to any FireDETEC® Compact Line System composed of one of the following kits:

B09023000 Compact Line Kit 12 liters with FireDETEC® actuation

B09023010 Compact Line Kit 12 liters with EM actuation

B09025000 Compact Line Kit 7 liters with FireDETEC® actuation

B09025010 Compact Line Kit 7 liters with EM actuation

B09024000 Compact Line Kit 4 liters with FireDETEC® actuation

B09024010 Compact Line Kit 4 liters with EM actuation

The following pre-engineered systems can also be used:

B09026XXXX

B09027XXXX

SP approved (SPCR 183)

UNECE approved (Regulation 107)

TPED approved (EU Directive 2010/35/EU)

FIREDETEC COMPACT LINE VEHICLE FIRE SYSTEM

027650022

CEODEUX Extinguisher Valves Technology S.A. • 24, rue de Diekirch • L-7440 Lintgen - Luxembourg

Imprint

Installation and Maintenance Manual FireDETEC® Compact Line System
EN Original version
Index: d
Release: 2017/11/28
Article number: 027650022
PG.G.04.004
© CEODEUX Extinguisher Valves Technology S.A.
Reprint, also in extracts, only with written permission.
Technical modifications reserved.

CEODEUX Extinguisher Valves Technology S.A.
24, rue de Diekirch
L-7440 Lintgen
Luxembourg
Tel: +352 32 78 32-1
Fax: +352 32 78 32-326
Email: firetec@rotarex.com
http://rotarexfiretec.com

Table of contents

1 Notes on the documentation 4
1.1 Other applicable documents 4
1.2 Storage of the documents 4
1.3 Symbols used 4
1.4 Applicability of this manual 4

2 Intended use 4
2.1 Combination with other components 5
2.2 Compliance with regulations 5
2.2.1 UNECE R107 5
2.2.2 SPCR 183 6

3 Scope of delivery 7
3.1 Checking the content of the delivery 7
3.2 Example of a FireDETEC® Compact Line System Art. No. B09026001 8

4 Risk assessment according to SPCR 183 9

5 System description 12
5.1 Optional components 12
5.2 Part names and functions of the Compact Line 12

6 Installation 14
6.1 General 14
6.2 Additional tools for installation 14
6.3 Assembly and first filling of the Compact Line 12
6.4 Precautions in case of transport 17
6.4.1 Before transport 17
6.4.2 After transport 18
6.5 Connecting the pressure switches to the Compact Line 18
6.6 Mounting of the Compact Line 19
6.7 Installation of the discharge line 19
6.7.1 Assembly guidelines for fittings 21
6.8 Installation of the EM actuation system 24
6.9 Installation of the FireDETEC® sensor tubing 24
6.9.1 Pressurizing the FireDETEC® sensor tubing 26
6.9.2 Putting the system into operation 26

7 Resetting the system after a fire 27
7.1 General 27
7.2 Additional tools for resetting the system 27
7.3 Disassembly and cleaning 27
7.4 Refilling of the Compact Line 27
7.5 Connecting the pressure switches to the Compact Line 29
7.6 Mounting of the Compact Line 29
7.7 Installation of the discharge line 29
7.8 Installation of the EM actuation system 29
7.9 Installation of the FireDETEC® sensor tubing 29
7.10 Pressurizing the FireDETEC® sensor tubing 29
7.11 Putting the system into operation 29

8 Malfunctioning 29

9 Final system check out 30

10 Maintenance 32
10.1 General 32
10.2 Maintenance programme 32
10.3 Maintenance intervals 32

11 Recycling and disposal 33

12 Technical data 33

13 Guarantee and warranty 34

14 Revision history PG.G.04.004 34

1 Notes on the documentation

Thank you for buying the π approved FireDETEC® Compact Line System.
Before installing and using this appliance, please read the instructions carefully and keep them in safe place for future reference. The instructions below are intended to help you throughout the entire documentation.

1.1 Other applicable documents

When assembling the FireDETEC® Compact Line System, pay attention to all the installation instructions for the components and assemblies. These instructions are included with the individual components of the system and the additional components.
We accept no liability for any damage caused by failure to observe these instructions!

1.2 Storage of the documents

Please pass on this installation and maintenance manual and all other applicable documents and auxiliary equipment to the authorized person, whose responsibility it is to ensure the manuals and auxiliary equipment are available whenever required.

1.3 Symbols used

Safety instructions are marked with symbols in this manual. The safety instructions are always introduced by signal words that express the extent of the danger:

⚠ DANGER	Indicates a hazardous situation which, if not avoided, will result in death or serious injury.
⚠ WARNING	Indicates a hazardous situation which, if not avoided, could result in death or serious injury.
⚠ CAUTION	Indicates a hazardous situation which, if not avoided, may result in minor or moderate injury.
NOTICE	Indicates useful tips and recommendations as well as information for efficient and trouble-free operation.

1.4 Applicability of this manual

This manual applies exclusively to the pre-engineered FireDETEC® Compact Line Systems (Article No. B09026XXX and B09027XXX) and to any FireDETEC® Compact Line System composed of one of the following Compact Line Kits:

Art. No. of the kit	Capacity	System actuation	Compact Line No.
B0902300X	12 l	FireDETEC® sensor tubing	B09020100
B0902301X	12 l	EM actuation	B09020110
B0902500X	7 l	FireDETEC® sensor tubing	B09020000
B0902501X	7 l	EM actuation	B09020010
B0902400X	4 l	FireDETEC® sensor tubing	B09020200
B0902401X	4 l	EM actuation	B09020210

2 Intended use

The FireDETEC® Compact Line System is built according to the state-of-the-art and recognised safety rules and regulations. The FireDETEC® Compact Line System is exclusively designed for the fire protection of engines (e.g. vehicles of every description, ships, generators).

The FireDETEC® Compact Line System must be installed, inspected, maintained, tested and recharged only by fire protection personnel - qualified and trained by CEODEUX Extinguisher Valves Technology S.A. - in accordance with existing regulations, rules and guidelines including requirements of the Governmental and/or Local Authority and other regulatory authorities (for example: the local transport agency).

The manufacturer cannot be held responsible for eventual damage caused by inappropriate, non-intended or irresponsible use and / or for repairs made to the product by unauthorized personnel.

Intended use includes observance of the operating and installation manuals and all other applicable documents, as well as adherence to maintenance and inspection conditions.

⚠ WARNING	For your own safety, do not allow anyone other than fire protection personnel - qualified and trained by CEODEUX Extinguisher Valves Technology S.A. - to install, service or repair this appliance. Any non-intended use is forbidden.

2.1 Combination with other components

The FireDETEC® Compact Line System must not be combined with components produced by other manufacturers than CEODEUX Extinguisher Valves Technology S.A. The use of non-genuine CEODEUX Extinguisher Valves Technology S.A. components shall be considered as non-intended use.

The guarantee and warranty does not apply to malfunction, failure or damage of the FireDETEC® Compact Line System if non-genuine components are used with the FireDETEC® Compact Line System.

2.2 Compliance with regulations

Depending on the regulation, the minimum quantity of extinguishing agent, nozzles (discharge points) and the pipe length are defined differently.

In chapters 2.2.1 and 2.2.2, three different nozzles are defined:

- the 6-90° (Art. No. 026205098), a full-cone nozzle with a spray angle of 90°
- the 6-45° (Art. No. 026205133), a full-cone nozzle with a spray angle of 45°
- the 9-90° (Art. No. 026205137), a high-flow full-cone nozzle with a spray angle of 90°

The quantity of nozzles shall be calculated according to the appropriate formula, and

- rounded to the closest number for 6-90° nozzles
- rounded up for the 6-45° nozzles

2.2.1 UNECE R107

The system can be designed using the following table:

UNECE R107			
Engine compartment size			**Extinguishing agent** **FireDETEC® TS 55**
Small engine compartments Volume: V < 4m³	Min. volume of extinguishing agent (l)		0,6 x V + 1,6
	Nozzle quantity (depending on nozzle type)	6-90°	2,1 x V + 5,6
		6-45°	0
		9-90°	0
	Maximum pipe length (m)		1,725 x V + 4,6
Large engine compartments Volume: V > 4m³	Min. volume of extinguishing agent (l)		0,4 x V + 2,4
	Nozzle quantity (depending on nozzle type)	6-90°	1,4 x V + 8,4
		6-45°	0
		9-90°	0
	Maximum pipe length (m)		1,15 x V + 6,9

We recommend to use only 6-90° nozzles. However, in some cases, 6-45° and 9-90° nozzles, may be more adapted and can be used. The results of the table above are summed up in the following graph:

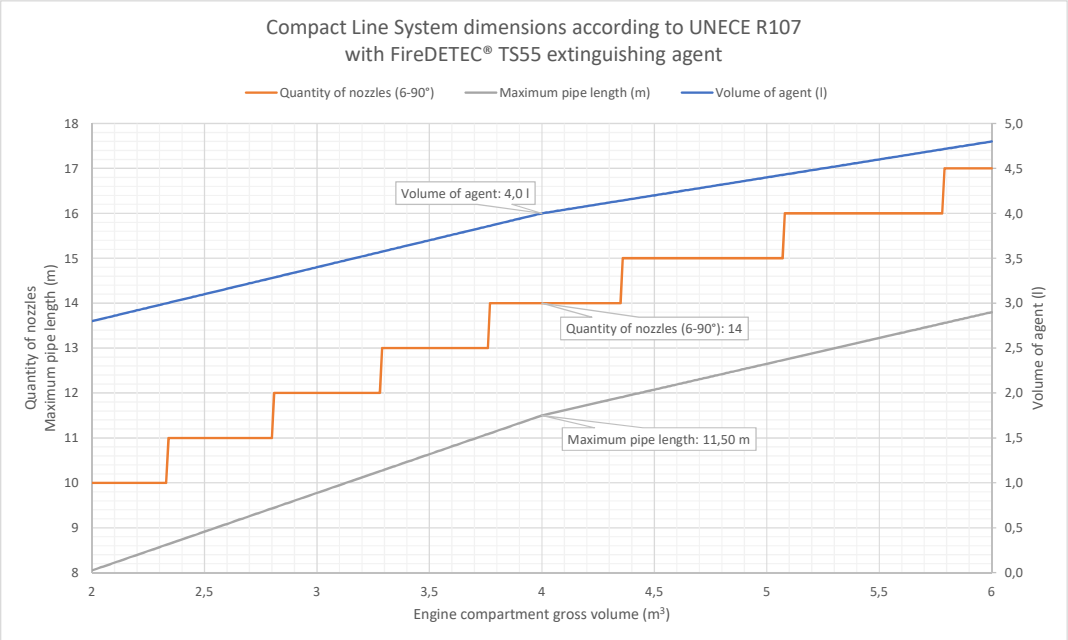

2.2.2 SPCR 183

The system can be designed using the following table:

SPCR 183				
Engine compartment size			**Extinguishing agent**	
			FireDETEC® TS 55	**Berki Cold®**
Small engine compartments Volume: V < 4m³	Min. volume of extinguishing agent (l)		1,8 x V + 4,8	1,8 x V + 4,8
	Nozzle quantity (depending on nozzle type)	6-90°	2,55 x V + 6,8	2,55 x V + 6,8
		6-45°	0	0,3 x V + 0,8
	Maximum pipe length (m)		13,6	10,4
	Maximum distance to the most remote nozzle (m)		6,7	4,2
	Maximum number of connections*		83	78
Large engine compartments Volume: V > 4m³	Min. volume of extinguishing agent (l)		1,2 x V + 7,2	1,2 x V + 7,2
	Nozzle quantity (depending on nozzle type)	6-90°	1,7 x V + 10,2	1,7 x V + 10,2
		6-45°	0	0,2 x V + 1,2
	Maximum pipe length (m)		13,6	10,4
	Maximum distance to the most remote nozzle (m)		6,7	4,2
	Maximum number of connections*		83	78

* a connection is defined as the coupling of a fitting and a tube or nozzle. For example, a T-fitting has 3 connections, a straight one has 2. Refer also to page 23.

Only 6-90° nozzles can be used with FireDETEC® TS55 extinguishing agent, and two or three 6-45° nozzles must be used with BerkiCold®. The results of the table above are summed up in the following graphs:

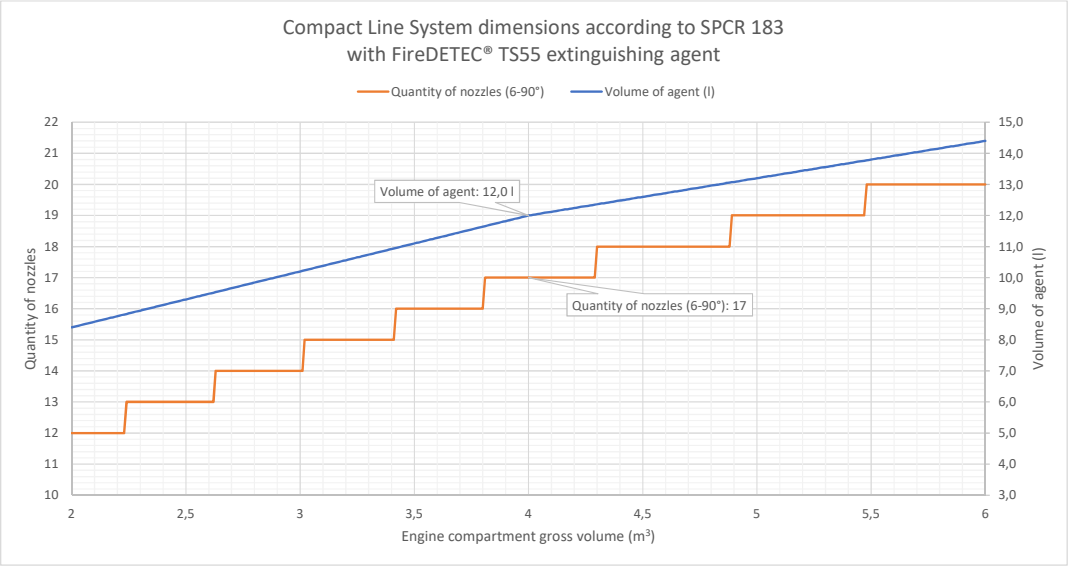

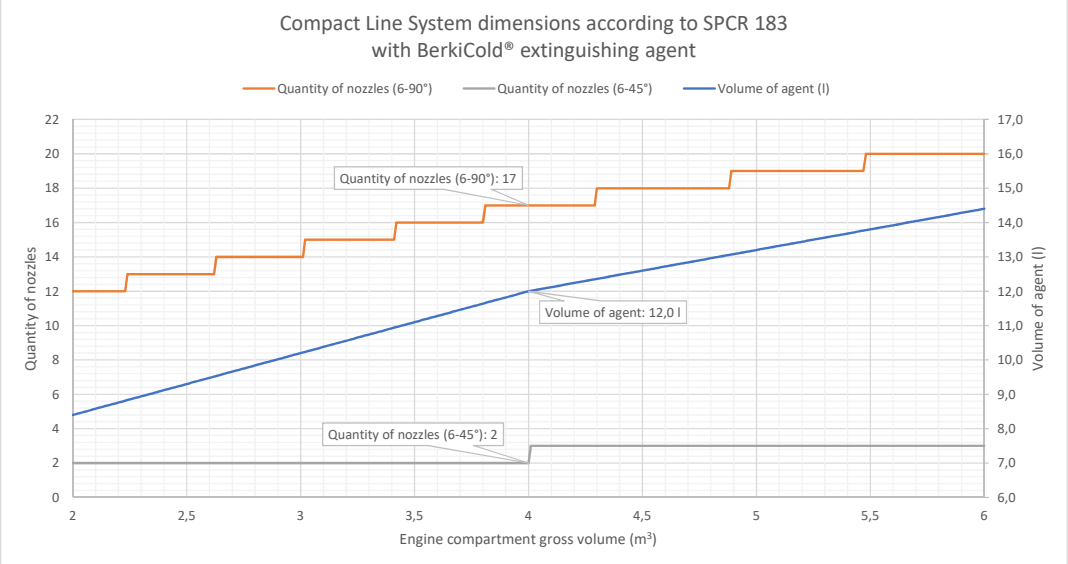

3 Scope of delivery

Unpack the FireDETEC® Compact Line System and remove all packaging material.

The FireDETEC® Compact Line System is available with two different kinds of actuation:

- FireDETEC® sensor tubing
- EM actuation

Independent from the kind of actuation, each FireDETEC® Compact Line System must be composed of a discharge line, fittings, pressure switches and accessories, which may need to be ordered separately.

The actuator - the FireDETEC® sensor tubing black - is only included in systems with FireDETEC® pneumatic actuation.

3.1 Checking the content of the delivery

NOTICE The marking lasered on the head of the Compact Line (refer to the front views in chapter 5.2) is the Compact Line article number, which may differ from the article number of the pre-engineered FireDETEC® Compact Line Systems or Compact Line Kits that was ordered. Refer to chapter 1.4.

The accessories listed in the table below are included in every Compact Line Kit listed in chapter 1.4. They are required for the filling and the installation of the Compact Line.

Qty.	Art. No.	Description
1	B09020XXX	Compact Line
1	029510053	Filling adapter (G1/4")
1	023107028	Outlet hollow screw
1	022500006	Outlet rubber disc
1	026307280	Outlet adapter
1	024000357	O-Ring ø 15x2 mm for outlet adapter
1	023267012	Plug for low pressure monitoring port
1	024000052	O-Ring ø 7.65x1.78 mm for LP monitoring port
1	029487009	Plug for gas filling port
4	024400063	Square taper washer M10 DIN434
1	B07830025*	L-Fitting for FireDETEC® tube connection
1	B07830023*	Brass inlet for FireDETEC® tube fitting
1	B07830031*	Plug for FireDETEC® tube fitting

* not included in kits with electromagnetic actuation

An example of a FireDETEC® Compact Line System is shown in chapter 3.2.

Refer to your order confirmation to get a detailed material list, or to the drawing if available.

Make sure, that the delivery is complete and that all parts are in perfect condition.

NOTICE The Compact Line is normally delivered with both flanges aligned in order to be fixed onto an even surface. However, the flanges sometimes move during transport. In this case, gently hit with a soft hammer one side of the flange to put it back into the correct position. If the surface is uneven, align the flanges with a soft hammer.

When the Compact Line is correctly attached to the surface, it is unable to move.

3.2 Example of a FireDETEC® Compact Line System (Art. No. B09026001)

Pos.	Art. No.	Qty.	Description
①	B09025000	1	Compact Line 7 liters including standard equipment
②	024100037	1	Gasket
③	B07835026	1	G1/4” Tube fitting (ø 8mm)
④	022720039	1	Flexible stainless steel hose L=1,25m
⑤	028225047	1	Pressure switch (160 bar)
⑥	028255048	1	Pressure switch (5 bar)
⑦	B07835027	4	Straight fitting (ø 8mm)
⑧	022700599	5	Stainless steel pipe (ø 8x1mm) L=1m
⑨	B07835029	4	T-Fitting tube (ø 8mm)
⑩	B07835031	5	Nozzle fitting - Rc 1/8” threaded elbow
⑪	B07835030	2	Nozzle fitting - Rc 1/8” threaded Tee
⑫	026205098	7	Spray nozzle 90° with protection cap
⑬	B07800202	1	FireDETEC® sensor tubing black (10m)
⑭	B07860002	30	Clip for attachment of the Fire-DETEC® sensor tubing (ø 6mm)
⑮	B07810025	1	End of line adapter with gauge and filling port
⑯	B07850030	1	Protection spring for FireDE-TEC® sensor tubing L=5,9 m
⑰	020080158	1	Extinguishing agent canister (7 liters)

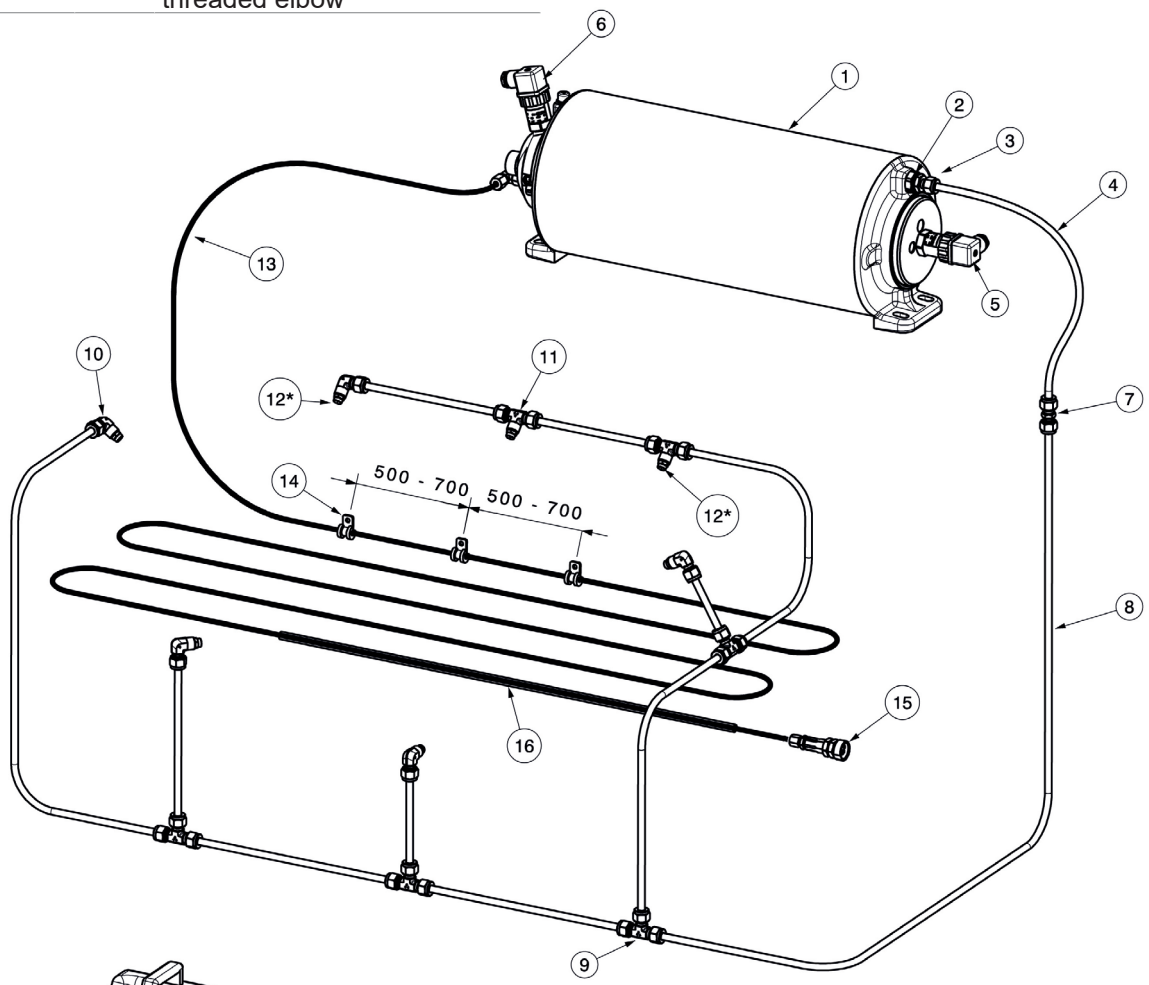

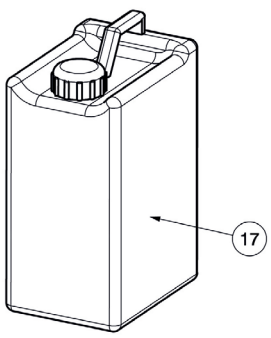

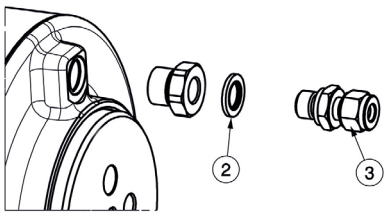

Detailed View

* Mount nozzles with PTFE tape

4 Risk assessment according to SPCR 183

For the installation of an SP approved FireDETEC® Compact Line System, the “Risk assessment form according to SPCR 183” on pages 8 and 9 must be filled out and sent back to CEODEUX Extinguisher Valves Technology S.A., Fax: +352 32 78 32-326, Email: firetec@rotarex.com for confirmation. A new “Risk assessment form according to SPCR 183” must be made for each installation. If a FireDETEC® Compact Line System is installed on several identical vehicles produced in series, one “Risk assessment form according to SPCR 183” can be made for up to 50 vehicles if they are produced on the same assembly line.

The main steps for an SP approved system are:

- Step 1: Risk assessment
- Step 2: Ordering of required components based on the risk assessment
- Step 3: Installation according to this manual

Information required for the risk assessment according to SPCR 183:

- Fire risk identification within the engine compartment
- Gross volume of engine compartment
- Protected fire risks identification in the engine compartment
- Installation drawings including placement of the FireDETEC® Compact Line System, controller, piping system, detection system, hoses
- Type and quantity of nozzles
- Nozzle location and direction
- System operation temperature
- Estimation of maximum air flow rate through the engine compartment

An installation example of the FireDETEC® Compact Line System is shown on this page below.

Article numbers with a short description of components are listed on page 8.

Additional information on risk assessment, installation, SP approval etc. are available in the documents SPCR 183 and SP Method 4912 on www.sp.se/safebus

Installation example of the FireDETEC® Compact Line System

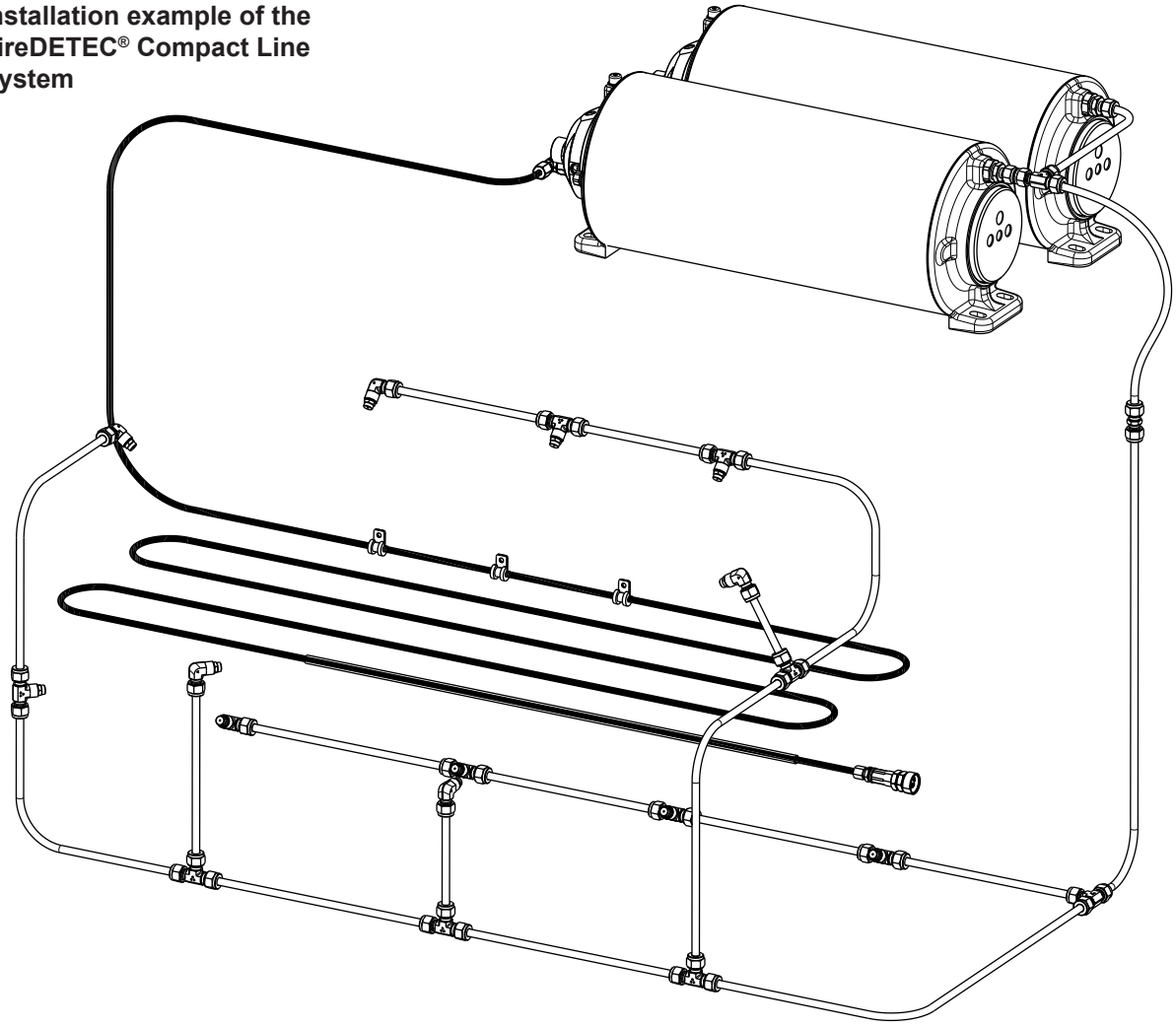

Risk assessment form according to SPCR 183

You can find the form to fill out at the end of this Installation and Maintenance Manual.
Obey the instructions on the corresponding forms!

General information

End user _____

Address _____

_____

Protected device _____

Constructor _____

Type _____

Serial number _____

Inventory number _____

Date of commissioning _____

Ordering codes - *Please fill in the required quantity*

Art. No.	Qty.	Description
Extinguishing System		
B09023000	_____	Compact Line 12 liters with FireDETEC® actuation
B09023010	_____	Compact Line 12 liters with EM actuation
B09025000	_____	Compact Line 7 liters with FireDETEC® actuation
B09025010	_____	Compact Line 7 liters with EM actuation
B09024000	_____	Compact Line 4 liters with FireDETEC® actuation
B09024010	_____	Compact Line 4 liters with EM actuation
B0902____	_____	Other Compact Line articles
Components for discharge line - Fittings		
B07835026	_____	G1/4” Tube fitting (ø 8mm)
B07835027	_____	Straight fitting (ø 8mm)
B07835028	_____	Elbow fitting (ø 8mm)
B07835029	_____	T-Fitting (ø 8mm)
B07835030	_____	Rc 1/8” threaded T-fitting
B07835031	_____	Rc 1/8” threaded elbow fitting
B07835033	_____	Cross fitting (ø 8mm)
B07835037	_____	Cross panel fitting (ø 8mm)
Components for discharge line - Nozzles		
026205098	_____	6-90° full cone nozzle
026205133	_____	6-45° full cone nozzle
026205137	_____	9-90° full cone nozzle (high flow)
Components for discharge line - Brackets		
B07860006	_____	Pipe bracket (ø 8mm)

Art. No.	Qty.	Description
Components for discharge line - Pipe / Tube		
022700599	_____	Stainless steel pipe (ø 8x1mm) L=1m
022720039	_____	Flexible stainless steel hose L=1,25m
022720040	_____	Flexible stainless steel hose L=0,6m
Components for detection line - Sensor tubing		
B07800200	_____	FireDETEC® sensor tubing black (100m)
B07800202	_____	FireDETEC® sensor tubing black (10m)
Components for detection line - Fittings		
B07830021	_____	Elbow fitting (ø 6mm)
B07830022	_____	T-fitting (ø 6mm)
B07830023	_____	Brass insert for tube fixation
B07830024	_____	G1/8” Straight fitting (ø 6mm)
B07830025	_____	G1/8” Elbow fitting (ø 6mm)
Components for detection line		
B07860002	_____	Clip for attachment of the FireDETEC® sensor tubing (ø 6mm)
B07850030	_____	Protection spring for FireDETEC® sensor tubing L=10 m
End of line adapter		
B07810025	_____	End of line adapter with gauge / filling port
B04420142	_____	Solenoid actuator (24V/9W) with gauge
B04420143	_____	Manual actuator with gauge / filling port
B04420145	_____	Manual actuator with gauge / filling port and aluminium body
Pressure switches		
028255047	_____	Pressure switch 160 bar
028255048	_____	Pressure switch 5 bar

For additional information or components refer to our Compact Line price list!

Protected fire risks

- ☐ Turbocharger
- ☐ Manifold / Muffler
- ☐ Injection line
- ☐ Fuel hoses
- ☐ Battery
- ☐ Electrical control units
- ☐ Auxiliary heater
- ☐ Hydraulic components
- ☐ Air conditioner
- ☐ Heat and noise insulation
- ☐ Generators
- ☐ Other _____

SAMPLE PAGE

Risk assessment form according to SPCR 183

You can find the form to fill out at the end of this Installation and Maintenance Manual.
Obey the instructions on the corresponding forms!

Dimensioning

			Remarks
Gross volume of engine compartment	_____	m^3	_____
Type of agent	☐ FireDETEC® TS55 ☐ Berki Cold®		_____
* Volume of needed agent	_____	l	_____
* Quantity of nozzles	_____		_____
Operating temperature range	_____ - _____	°C	_____
Estimation of air flow in the engine compartment	_____	m^3/s	_____

* Refer to chapter 2.2

Installation sketch - *Please make a detailed drawing of the planned installation and add fire risk sources / components in cube form depending on their fire risk potential*

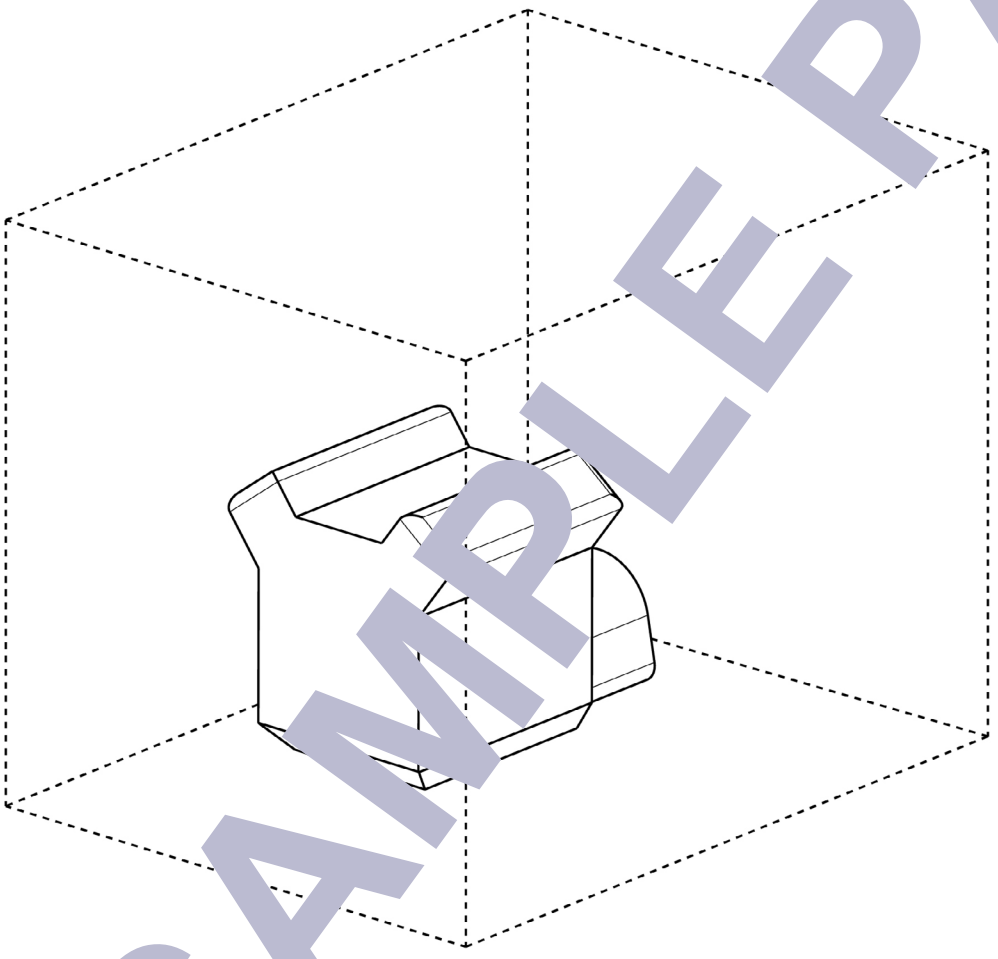



small cube = low fire risk

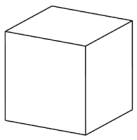

medium cube = medium fire risk

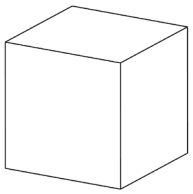

big cube = high fire risk

SAMPLE PAGE

Comments

_____

_____

_____

Commissioning performed in presence of

Date	Signature end user representative	Signature installer representative

5 System description

The FireDETEC® Compact Line System is an easy-to-install fire extinguishing system with FireDETEC® TS55 or Berki Cold® as extinguishing agent. The system does not require any external power sources, neither for fire detection nor for suppressing, except for the EM version that is actuated electrically.

The FireDETEC® Compact Line System is designed for engines (e.g. all kinds of motor-driven vehicles, ships, generators). The combination of the extinguishing agent FireDETEC® TS55 or Berki Cold® and nitrogen is suitable for suppressing fires which are triggered by oils, gasoline, diesels, lubricants or other combustible liquids.

The FireDETEC® Compact Line System can be fitted in any position adjacent to the area to protect - without restriction.

The Compact Line is made from extruded aluminium alloy and it is extremely resistant to corrosion. A high pressure cylinder is integrated inside the Compact Line, coaxially to the low pressure cylinder. The low pressure chamber is the space between both cylinders, and the high pressure chamber is inside the high-pressure cylinder.

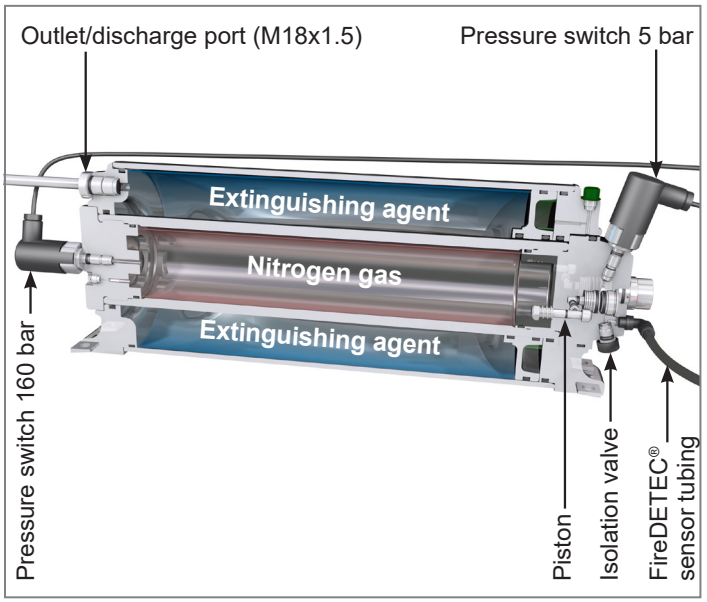

The high pressure cylinder is pressurized with nitrogen. The filling pressure is 200 bar at 20°C. The low pressure cylinder is filled with the extinguishing agent. During normal operation, the outer chamber of the Compact Line is not pressurized and the outer cylinder serves as additional protection against outer damages for the inner high pressure cylinder.

The FireDETEC® Compact Line System can be equipped with a special heat-sensitive tube, the FireDETEC® sensor tubing. The FireDETEC® sensor tubing is connected to the Compact Line and pressurized with 16 bar nitrogen gas. It reacts to fire and extreme temperatures and must be installed in the fire hazard area. It bursts at approximately 110°C. The bursting of the FireDETEC® sensor tubing triggers the fire suppression process.

If the area to protect is already equipped with an electronic fire detection system or if the FireDETEC® sensor tubing is not desired, a FireDETEC® Compact Line System equipped with an EM actuator can be used, which upon reception of an external signal, will trigger the release of extinguishing agent.

Fire is suppressed by the discharge line, which is also connected to the Compact Line. The discharge line is a combination of a flexible stainless steel hose, stainless steel piping and nozzles. The discharge line must be installed above fire hazard areas.

When the FireDETEC® sensor tubing bursts or when the system is actuated by the electromagnetic actuator (only EM version), a pressure builds up behind the annular piston inside the Compact Line. The annular piston moves and releases the extinguishing agent. The extinguishing agent flows through the discharge line to the nozzles, which distributes the extinguishing agent on the protected area.The number of and distance between nozzles can be adjusted according to the size and geometry of the protected area. While the Compact Line is releasing the extinguishing agent, the pressure and the flow rate remain constant. After all the extinguishing agent has discharged, the annular piston has reached its end position.

5.1 Optional components

The optional components listed below are optimized for working with the FireDETEC® Compact Line System. For further information, refer to the FireDETEC® catalogue and to the technical manuals of each component (if available).

Manual release device: a manual release device equipped with a gauge can be installed at the end of the FireDETEC® sensor tubing. Two versions are available:

- manual actuator (Art. No. B04420143)
- a piston block (Art. No. B04420145)

EM Actuator: a 24V DC electromagnetic actuator (Art. No. B04420142) can be additionally installed at the end of the FireDETEC® sensor tubing to pilot the actuation with an external electronic system. The EM actuator is equipped with a gauge.

Pressure switches: in order to monitor the system, 2 pressure switches can be installed.
The pressure switch 160 bar (Art. No. 028255047) monitors the entire FireDETEC® Compact Line System. A pressure drop in the high pressure chamber indicates a leakage in the high and/or low pressure section. In case of leakage in the low pressure section, the high pressure cylinder compensates the pressure to ensure the proper function of the FireDETEC® sensor tubing.

The pressure switch 5 bar (Art. No. 028255048) monitors the pressure in the FireDETEC® sensor tubing, where the pressure drops in case of actuation. The actuation is triggered either by the bursting of the FireDETEC® sensor tubing or by the powering of the electromagnetic coil.

Dashboard electronic monitoring device: a dashboard electronic monitoring device (Art. No. B07850302) continually analyses the information provided by the pressure switches and visually displays the state of the system. In case of a fire, an output can be used to trigger an alarm, a visual signal, etc.

Venting tool: this special tool (Art. No. 029900155) can be used to push the bleed valve ball after system discharge to vent the residual pressure out of the Compact Line.

5.2 Part names and functions of the Compact Line

To guide you through the installation and filling process, the different parts of the Compact Line will be referred to as follows:

Front view of the Compact Line with FireDETEC® actuation

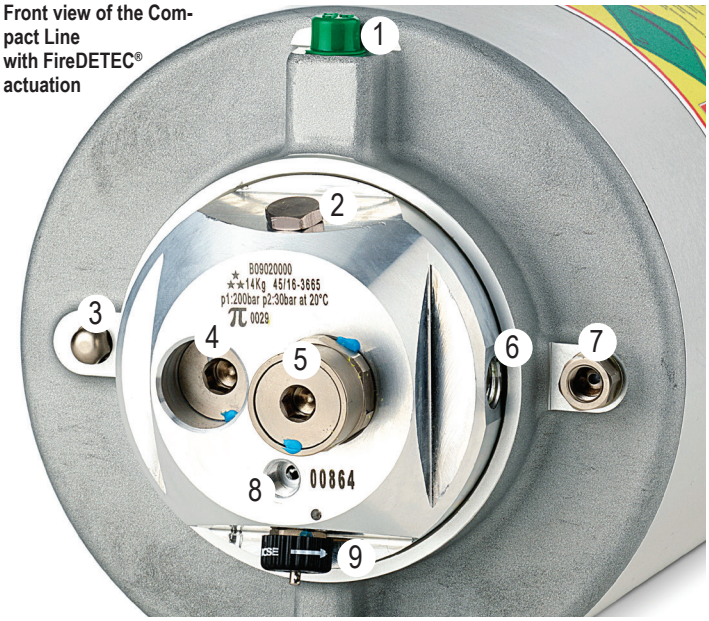

Back view of the Compact Line

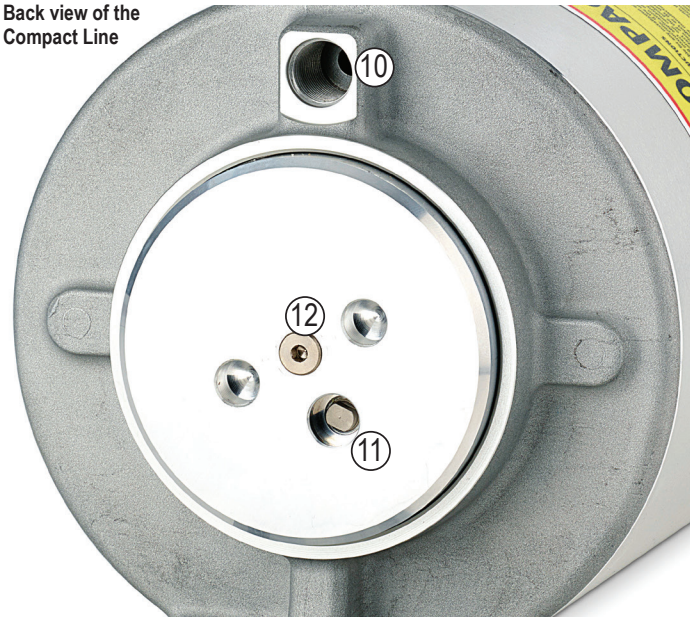

Front view of the Compact Line with EM actuation

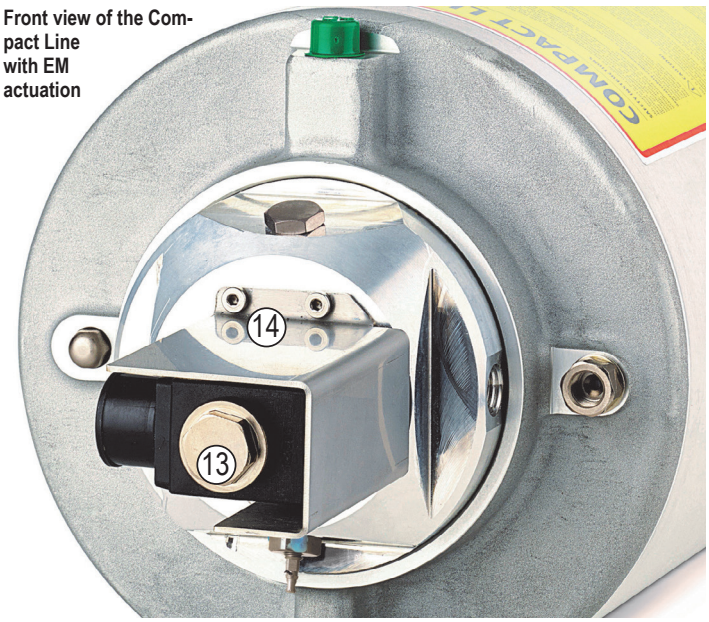

Legend	
①	Medium pressure burst disc screw with plastic cap
②	Low pressure monitoring port (M10x1)
③	Piston position indicator
④	First pressure regulator
⑤	Second pressure regulator
⑥	Low pressure safety valve
⑦	Bleed valve
⑧	FireDETEC® tube connection port (G1/8'') *
⑨	Isolation valve
⑩	Outlet/discharge port (M18x1.5)
⑪	High pressure burst disc screw
⑫	High pressure monitoring port (M10x1) (plugged on the picture)
⑬	Electromagnetic coil (24VDC/9W)
⑭	Coil protecting sheet

* This port is plugged in case of an EM actuation

The Compact Line with EM actuation has an electromagnetic coil ⑬, that is fixed on the second pressure regulator ⑤ and protected by a metal sheet ⑭ .
Moreover, the FireDETEC® tube connection port ⑧ is plugged.

NOTICE The rounded numbers ① to ⑭ in the following chapters refer to this chapter.

6 Installation

6.1 General

It is the responsibility of the installer to make sure that the installation is performed in accordance with existing regulations, rules and guidelines including requirements of the Governmental and/or Local Authority and other regulatory authorities.

⚠ DANGER

Always wear safety goggles, resistant gloves and protective clothing.

Always do the work in a clean and well lit area with good airflow.

Do not eat, drink or smoke in the work area.

Put a warning notice in front of the work area to tell persons not to enter the work area. Keep unauthorized persons out of the work area.

Do not inhale the nitrogen gas!

Do not ingest the extinguishing agent! In case of contact refer to the Material Safety Data Sheet (MSDS).

Malfunctioning of the FireDETEC® Compact Line System can be caused by dirt or dust. Use only clean Compact Lines and make sure, that the extinguishing agent is free of contamination.

6.2 Additional tools for installation

For the installation of the FireDETEC® Compact Line System, the following tools are required:

- Open-ended spanner (12 mm, 14 mm and 24 mm)
- Socket wrenches (7 mm, 14 mm and 24 mm)
- Allen key (7 mm)
- Torque wrench
- Screwdrivers
- Nitrogen gas
- Pressure gauge
- Funnel
- Compressed air supply

Additional tools, that must be ordered from CEODEUX Extinguisher Valves Technology S.A.:

- Tube cutter (Art. No. B07850001)
- Gas filling adapter (Art. No. 029510053)
- Pressure gauge 0 - 20 bar (Art. No. 029720086)
- Pressure gauge 0 - 350 bar (Art. No. 029720059)

6.3 Assembly and first filling of the Compact Line

All Compact Lines have a nameplate providing the following information:

- Assembly number
- Agent weight
- Weight information
- Safety instructions

(1) FireDETEC® Compact Line System: check if the isolation valve ⑨ is closed. If the isolation valve is open, tighten the isolation valve by turning the handwheel of the isolation valve in the indicated “close” direction.
An EM actuation system does not have a handwheel. Continue with step 2.

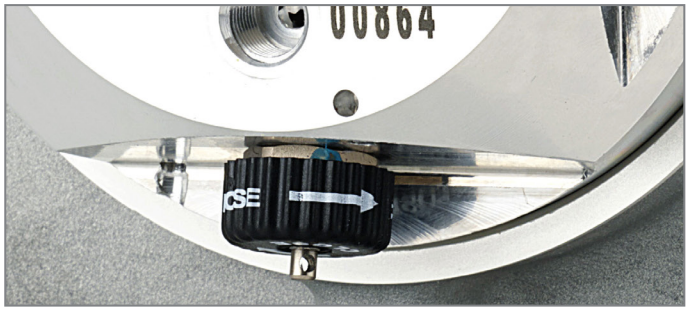

⚠ WARNING Do not open the isolation ⑨ valve until the system is installed completely!

(2) Unscrew the bleed valve ⑦. Make sure that the bonded seal is present.

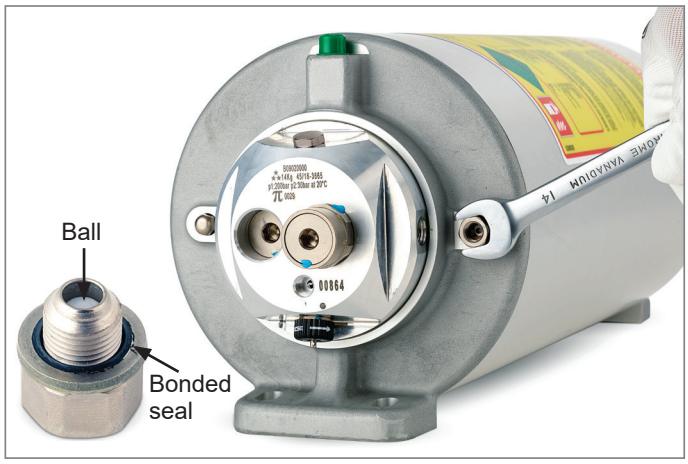

(3) Screw the gas filling adaptor (Art. No. 029510053) into the high pressure monitoring port (M10x1) ⑫ and tighten it by hand.

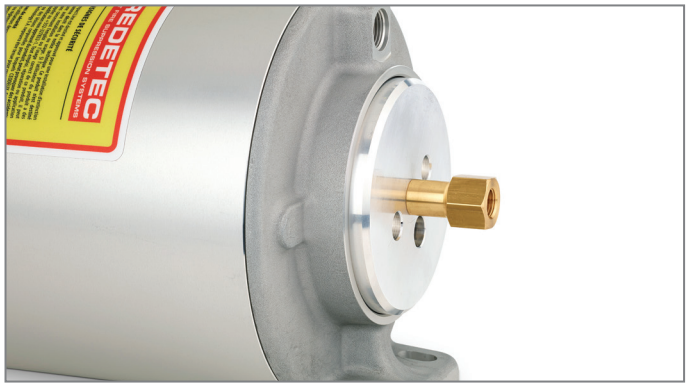

(4) The Compact Line must be filled with a pressurized nitrogen supply. Fill the Compact Line with nitrogen up to a pressure of 200 bar at 20°C, increasing the pressure slowly.

NOTICE If you increase the pressure too fast, nitrogen may escape from the bleed valve ⑦. In this case, wait until no more nitrogen gas escapes from the bleed valve ⑦. Then repeat this step, but increase the pressure slower or use a cross-section reduction (Ø 0,5 mm).

(5) After filling, remove the gas filling adapter (Art. No. 029510053) from the high pressure monitoring port (M10x1) ⑫ .

(6) Screw a pressure gauge (Art. No. 029720059) into the high pressure monitoring port (M10x1) ⑫ to check the pressure in the Compact Line.

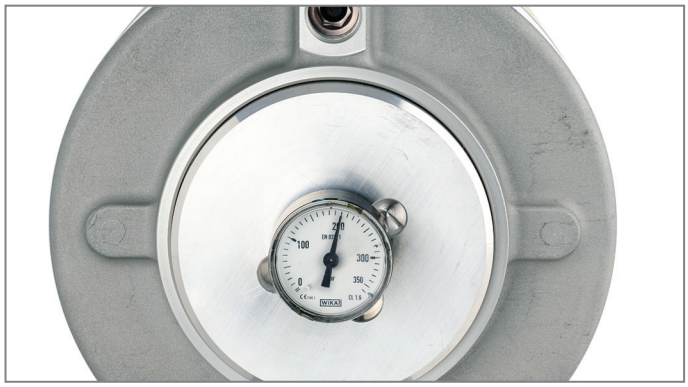

If the pressure gauge indicates a pressure of 200 bar at 20°C, the Compact Line is filled correctly.
If the pressure gauge indicates a pressure less than 200 bar remove the pressure gauge and repeat steps 3 to 6.

⚠ CAUTION If the pressure gauge indicates a pressure more than 200 bar, contact CEODEUX Extinguisher Valves Technology S.A. or an authorized representative.

(7) Unscrew the pressure gauge. A “popping” sound can occur when unscrewing the pressure gauge. This is normal and safe.

⚠ DANGER Do not open the isolation valve ⑨! Doing so would activate the system!

(8) Check if the piston position indicator ③ is projecting out as shown on the left picture below. This indicates that the piston inside the chamber is in the correct starting position.



If the piston is not in the correct starting position as shown on the right picture above:

Charge the piston with compressed air by pushing the compressed air gun on the outlet/discharge port (M18x1.5) ⑩.

NOTICE To avoid leakage of air out of the outlet/discharge port (M18x1.5)⑩, use a Ø 8 mm flexible tube at the end of the air gun.



The piston position indicator ③ is pushed back into its correct starting position.

(9) Put the Compact Line upright with the outlet/discharge port (M18x1.5) ⑩ facing upwards.

(10) Place a funnel on the outlet/discharge port (M18x1.5) ⑩.



(11) Fill the Compact Line via the funnel with the extinguishing agent. Obey the different filling volumes in the table below.

Extinguishing agent	Operating temperature range	Filling volume at 20°C		
		4 liters Compact Line	7 liters Compact Line	12 liters Compact Line
FireDETEC® TS55	-35°C to 30°C	4 l	7 l	12 l
FireDETEC® TS55	30°C to 80°C	3,9 l	6,9 l	11,8 l
Berki Cold®	0°C to 30°C	4 l	7 l	12 l
Berki Cold®	30°C to 50°C	3,9 l	6,9 l	11,8 l

(12) Remove the funnel when the Compact Line is filled.

(13) Place a new rubber disc (Art. No. 022500006) into the hollow screw (Art. No. 023107028).



NOTICE The hollow screw and rubber disc are delivered loose with a new Compact Line.

(14) Put the hollow screw with the rubber disc into the outlet/discharge port (M18x1.5) ⑩ and tighten it with a torque of 20 Nm by using the Allen key.

⚠ CAUTION Do not push the rubber disc out of the hollow screw! Do not break or puncture the rubber disc!

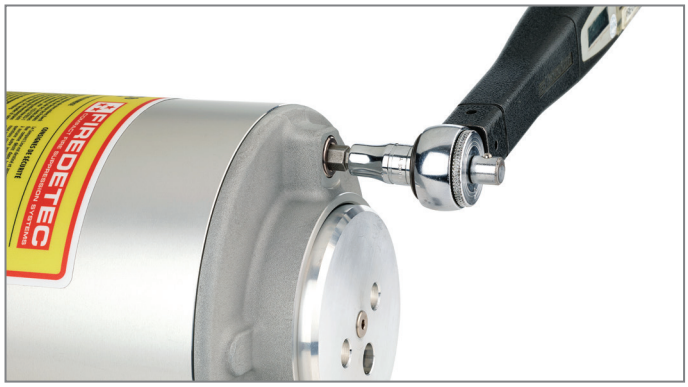

(15) Place the Compact Line on a flat surface.

(16) Make sure that the O-Ring Ø15x2 (Art. No. 024000357) is on the outlet adapter (Art. No. 026307280). Screw the outlet adapter on the outlet/discharge port (M18x1.5) ⑩ and tighten it with a torque of 30 Nm.

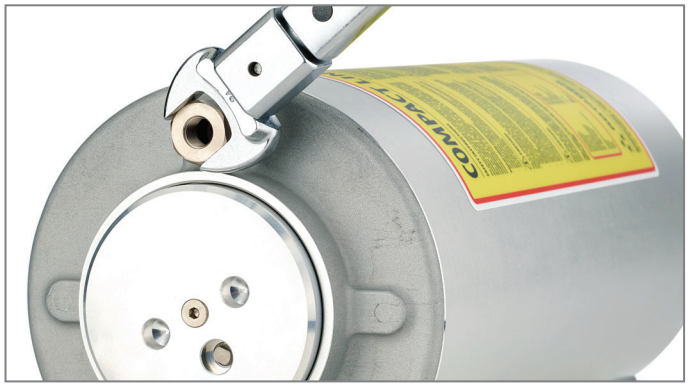

The first filling of the Compact Line is now complete.

6.4 Precautions in case of transport

We strongly recommend filling the Compact Line as close as possible to its final installation place. However, if Compact Lines must be transported filled and pressurized, extra safety precautions need to be taken.

6.4.1 Before transport

⚠ DANGER Non-compliance with the following instructions may result in an unexpected discharge of the Compact Line and may cause serious injuries! Obey the following steps carefully, because the isolation valve ⑨ is closed and therefore reacts very sensitive. Opening the isolation valve ⑨ would instantly discharge the Compact Line!

(1) Screw the outlet plug (Art. No. 029480021) in the outlet adapter (Art. No. 026307280) located in the outlet/discharge port (M18x1.5) ⑩.

(2) Check if the bleed valve ⑦ is not screwed on the Compact Line. Make sure that it is transported with it separately.

(3) The L-Fitting for FireDETEC® tube connection (Art. No. B07830025) is composed of a straight part and an L-part. Screw the straight part on the FireDETEC® tube connection port (G1/8'') ⑧.

(4) Screw the plug for FireDETEC® tube fitting (Art. No. B07830031) on the straight part of the L-Fitting for FireDETEC® tube connection (Art. No. B07830025).

(5) Seal the isolation valve ⑨ with a safety wire (Art. No. 027200007).

(6) Plug the high pressure monitoring port (M10x1) ⑫ with the plug (Art. No. 029487009).

(7) Plug the low pressure monitoring port (M10x1) ② with the plug (Art. No. 023267012). Make sure that the O-Ring (Art. No. 024000052) is attached to the plug.

(8) Use a shock-resistant packaging for the Compact Line. Include the material and tools required for the end of the installation. Make sure that the transport company guaranties a transport temperature within the operating temperature range of the the Compact Line.
The transport can now be organized. Since the Compact Line is pressurized and filled with extinguishing agent, the local authorities may have to be notified and an accredited transporter may be necessary.

6.4.2 After transport

Upon reception of the FireDETEC® Compact Line System, all pressurized and filled Compact Lines must be checked for damages. Do not use damaged Compact Lines!

(1) Remove the plug (Art. No. 029487009) from the high pressure monitoring port (M10x1) ⑫ and screw the pressure gauge 0 - 350 bar (Art. No. 029720059, must be ordered separately) into the high pressure monitoring port (M10x1) ⑫.

(2) Remove the plug (Art. No. 023267012) from the low pressure monitoring port (M10x1) ② and screw the pressure gauge 0 - 20 bar (Art. No. 029720086, must be ordered separately) into the low pressure monitoring port (M10x1) ②.

(3) Check if the pressure indicated by the pressure gauges is correct:
- 200 bar at 20°C at the high pressure monitoring port (M10x1) ⑫
- 16 bar at 20°C at the low pressure monitoring port (M10x1) ②

(4) Unscrew the plug for FireDETEC® tube fitting (Art. No. B07830031) from the FireDETEC® tube connection port (G1/8'') ⑧.

(5) Unscrew the outlet plug (Art. No. 029480021) from the outlet adapter (Art. No. 026307280) located in the outlet/discharge port (M18x1.5) ⑩.

(6) If you want to monitor your Compact Line, unscrew the pressure gauges from the high pressure monitoring port (M10x1) ⑫ and from the low pressure monitoring port (M10x1) ② and refer to chapter 6.5.
If you do not want to monitor your Compact Line, continue with chapter 6.6.
At this point, the isolation valve ⑨ still must be sealed in the closed position with the safety wire (Art. No. 027200007). Only remove the safety wire at the end of the installation, when you are requested to open the isolation valve ⑨ in chapter 6.9.2. Then, seal the isolation valve ⑨ again in the open position.

6.5 Connecting the pressure switches to the Compact Line

The pressure switch 160 bar and the pressure switch 5 bar can be used to monitor the system. Monitoring ports without pressure switch must be plugged.

⚠ DANGER If no pressure switch is used, it is mandatory to use pressure gauges instead and it is mandatory to check the pressure every month! In case of a high-vibration environment, special pressure gauges must be used.

NOTICE The use of pressure switches is essential to monitor the Compact Line and to make sure that it is always in proper working condition. CEODEUX Extinguisher Valves Technology S.A. accepts no liability in case of malfunctioning of a non-monitored system.

(1) Screw the pressure switch 160 bar (Art. No. 028225047) into the high pressure monitoring port (M10x1) ⑫ and tighten it by hand.

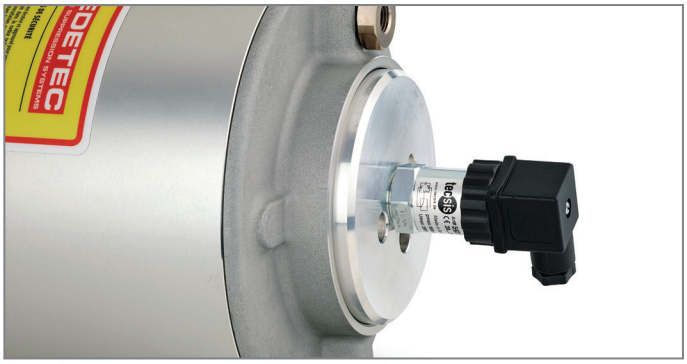

Alternatively, screw the pressure gauge 0 - 350 bar (Art. No. 029720059) into the high pressure monitoring port (M10x1) ⑫ and tighten it by hand.

(2) Screw the pressure switch 5 bar (Art. No. 028255048) into the low pressure monitoring port (M10x1) ② and tighten it by hand.

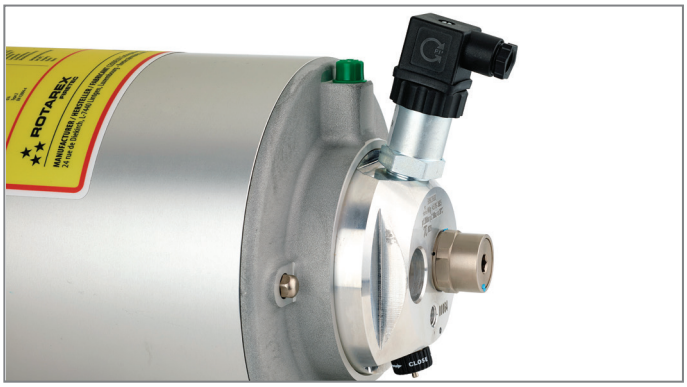

Alternatively, screw the pressure gauge 0 - 20 bar (Art. No. 029720086) into the low pressure monitoring port (M10x1) ②. Tighten it by hand.

NOTICE The plugs delivered in the kit (Art. No. 029480009 for the high pressure monitoring port (M10x1) ⑫ and for the low pressure monitoring port (M10x1) ② (Art. No. 023267012 equipped with the O-Ring Ø 7.65x1.78 Art. No. 024000052) are only for the transport of empty Compact Lines. The pressure must be monitored at all times!

6.6 Mounting the Compact Line

Install the Compact Line only in an easily accessible area. The Compact Line must be located so that inspection and maintenance activities can be carried out easily to keep the interruption of the fire protection system as short as possible.

NOTICE If you use a Compact Line with FireDETEC® sensor tubing, make sure that the isolation valve ⑨ is easily accessible! The isolation valve ⑨ must be opened and sealed at the end of the installation process.
The discharge line and the FireDETEC® sensor tubing must be connected to the Compact Line and the FireDETEC® sensor tubing must be pressurized, before the isolation valve ⑨ is opened and sealed!

(1) Determine the location of the Compact Line. The Compact Line must be placed outside the protected area on an even surface.

⚠ DANGER Do not locate the Compact Line on the engine or in the engine compartment!
Do not locate Compact Lines where they are exposed to moisture, physical damage, chemicals, harsh weather conditions or direct sunlight.

(2) Choose the installation position. The Compact Line can be fitted in any position.

⚠ CAUTION In case of a vertical or an angular installation, make sure, that the label is not upside-down!

(3) Fix the Compact Line with M10 (8.8) bolts on a flat surface. For the axis dimension of the fixation holes, refer to chapter 11. Use the DIN 434 square taper washers (Art. No. 024400063) to even out the inclined surface under the screw head.

6.7 Installation of the discharge line

The discharge line is a combination of a flexible stainless steel hose and stainless steel piping.

All piping must be installed in accordance with good engineering practices. Allowance for expansion and contraction of the piping must be taken into account. The piping system must be secured with pipe brackets.

NOTICE For the assembling of the fittings refer to the Assembling Guidelines on page 21. Use only stainless steel pipes (ø 8x1mm).

(1) Determine the position of the nozzles (refer to chapter 2.2 for article numbers and types). The nozzles must be located around the hazard area. The outlet of the nozzles must be free from obstructions and able to discharge the extinguishing agent freely over the protected area.

NOTICE The risk assessment in chapter 4 shall help determining the location of the nozzles.

(2) Determine the routing of the discharge line from the Compact Line to the nozzles.

NOTICE The maximum pipe length between a nozzle depends on the certification considered. Refer to chapter 2.2 for more details.

(3) Install the flexible stainless steel hose and stainless steel piping from the Compact Line to the location of the nozzles. A complete discharge line consists of:

- Tube fittings (Art. No. B07835026)
- Flexible stainless steel hose (Art. No. 022720039)
- Straight fittings (Art. No. B07835027)
- T-fittings (Art. No. B07835029)
- Stainless steel tubes (Art. No.. 022700599)
- Nozzle fittings - straight (Art. No. B07835047)
- Nozzle fittings - elbow (Art. No. B07835031)
- Nozzle fittings - tee (Art. No. B07835030)

(4) Secure the discharge line around the hazard area. Use appropriate clamps to secure the discharge line to the structure of the vehicle.

(5) Screw a plug (Art. No. 023260062), wrapped with self-adhesive PTFE tape, into each nozzle port of the discharge line. The plug (Art. No. 023260062) must be ordered separately.

(6) Connect the flexible stainless steel hose to a source of pressure (air, water or suitable medium) (the male connection fitting can be used to facilitate the assembly).

(7) Pressurize the discharge line to 35 bar for a period of 5 minutes.

(8) Isolate the discharge line and check for leakage by measuring a loss of pressure for at least 5 minutes, or check for leakage of the connections by using a leak spray (gas medium) or by looking for drops (liquid medium).

(9) Release the pressure in the discharge line.

(10) Disconnect the flexible stainless steel hose.

(11) Remove all screws from the nozzle ports and clean the threads.

(12) Clean and dry the discharge line if necessary.

(13) Screw the male connection fitting to the Compact Line port and connect the flexible stainless steel hose.

(14) Mount the nozzles with PTFE tape. Wrap self-adhesive PTFE tape clockwise twice around the thread of the nozzles. Cut off the tape cleanly and press it carefully by hand against the thread.

⚠ CAUTION Stretch the tape easily while wrapping it around the thread in order to avoid bulges and to improve adherence. Make sure that the tape does not obstruct the outlet of the nozzle.

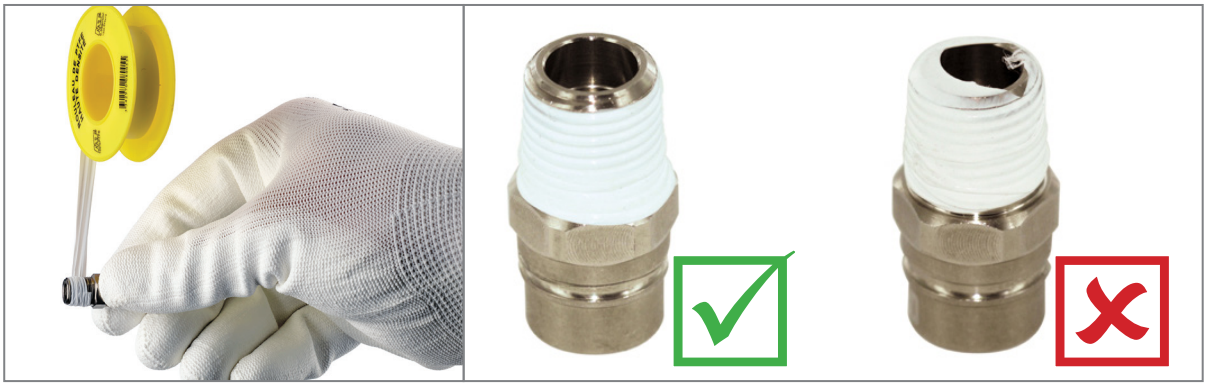

(15) Screw the nozzles to the stainless steel tube and tighten each nozzle with a torque of 14 Nm.

(16) Put a protection cap on each nozzle.

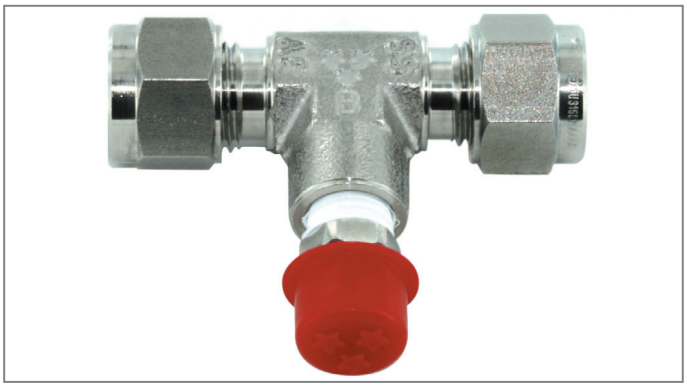

6.7.1 Assembly guidelines for fittings

Assembly in 4 steps

(1) Insert the stainless steel tube in the ready-to-use fitting so that the tube end rests squarely against the shoulder.

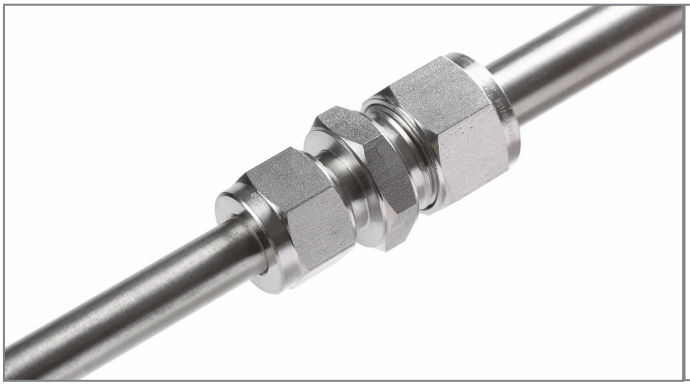

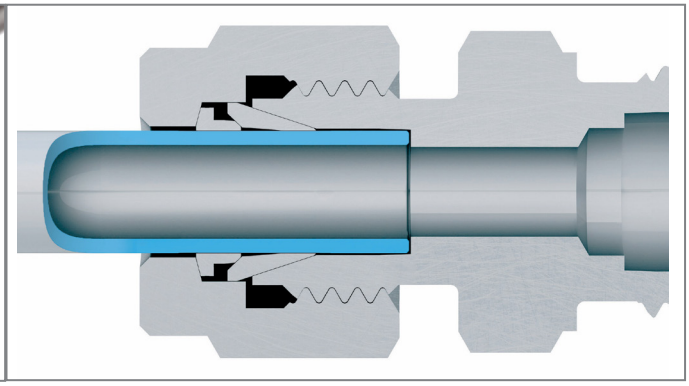

(2) Tighten the nut on the body by hand. The stainless steel tube should not be able to turn freely. If the stainless steel tube turns by hand or axially in the fitting, tighten the nut lightly with a wrench until the stainless steel tube stops turning.



(3) Now, mark the position of the nut with a marking pen. This is necessary to control the exact rotation to achieve the proper tightness.



(4) Use a wrench to tighten the nut clockwise 1 ¼ turn.



Disassembly

Mark the exact position of the nut as shown on the picture on the next page. The markings are necessary to return to the exact position when reassembling.

- Mark the depth of the nut on the stainless steel tube (at the back of the nut)
- Mark the alignment between nut and body (use the flats)

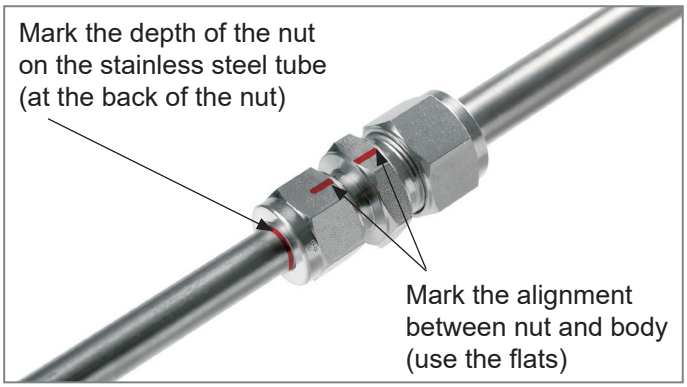

Reassembly

(1) Insert the stainless steel tube with the crimped ferrules into the fitting.
Make sure the stainless steel tube end fits squarely against the fitting seat and that the front ferrule realigns with the tube crimp.Tighten the nut as far as possible by hand. Then, tighten the nut with a wrench until the nut returns to its exact original position. The marks are now aligned and you feel a significant resistance in the torque.



(2) Now, give a slight additional torque on the wrench to ensure tightness.



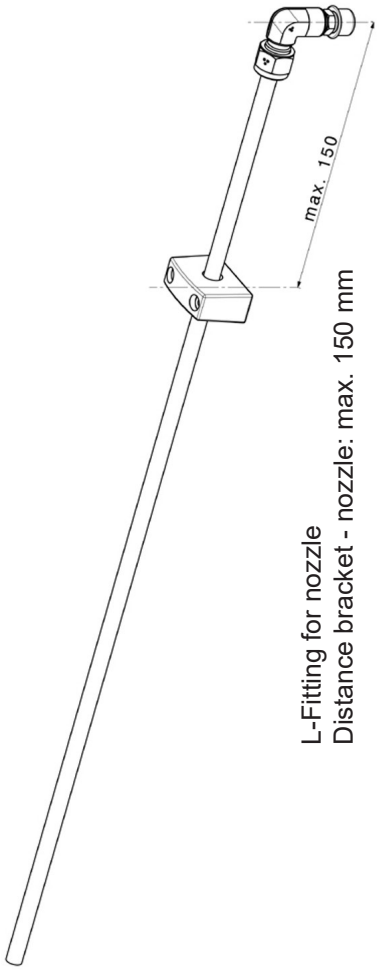

L-Fitting for nozzle
Distance bracket - nozzle: max. 150 mm

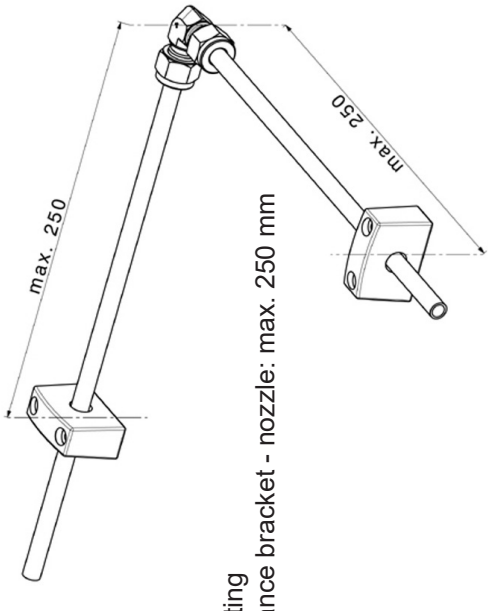

L-Fitting
Distance bracket - nozzle: max. 250 mm

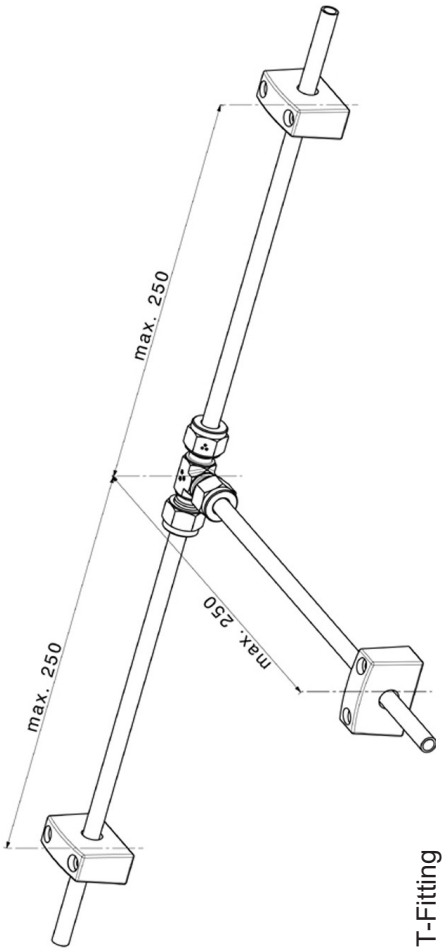

T-Fitting
Distance bracket - nozzle: max. 250 mm

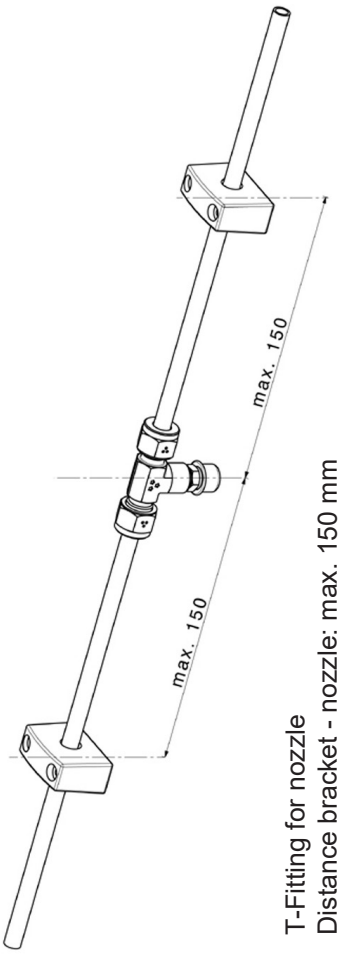

T-Fitting for nozzle
Distance bracket - nozzle: max. 150 mm

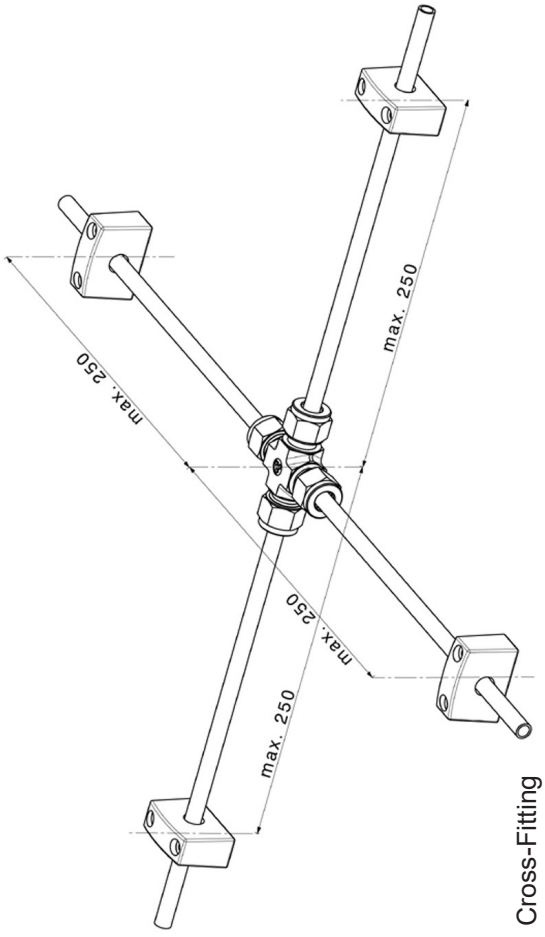

Cross-Fitting
Distance bracket - fitting: max. 250 mm

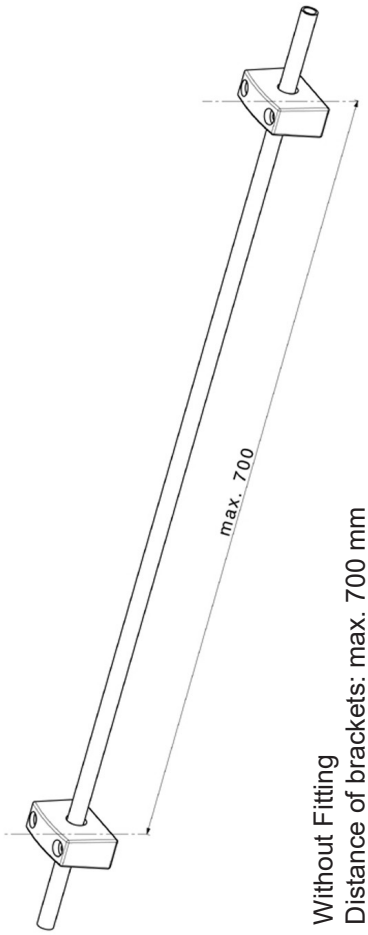

Without Fitting
Distance of brackets: max. 700 mm

6.8 Installation of the EM actuation system

If you are not using a Compact Line with EM actuation, continue with chapter 6.9.

Check if the FireDETEC® tube connection port (G1/8'') ⑧ is protected with a plug and if the plug is tightened securely.

Make sure that the discharge line is securely connected to the Compact Line.

The installation of the FireDETEC® Compact Line System is now finished, but the EM actuator needs to be connected.

The EM actuator has an EN 175301-803 form A connector, 24V DC, 9W, that must be connected to a power source.

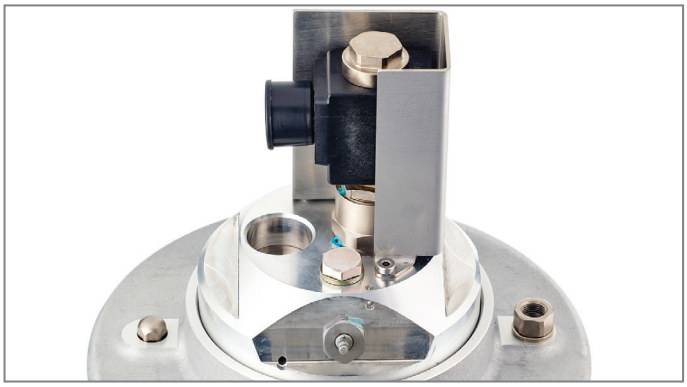

6.9 Installation of the FireDETEC® sensor tubing

The installation of the FireDETEC® sensor tubing is only necessary if you are using a Compact Line with FireDETEC® actuation.

The correct placement of the FireDETEC® sensor tubing is important because it is heat sensitive. For effective fire protection the FireDETEC® sensor tubing must be placed above hazard areas.

NOTICE Do not make kinks in the FireDETEC® sensor tubing. Always obey the minimum bend radius of 150 mm. Do not install the FireDETEC® sensor tubing in an environment where the maximum ambient temperature exceeds 120°C. Do not use self-adhesive clips to fix the FireDETEC® sensor tubing.

(1) Pass the end of the FireDETEC® sensor tubing through the special protection spring (Art. No. 022200040).

(2) Make sure that the wall thickness at the end of the FireDETEC® sensor tubing is equal. The difference in wall thickness must not exceed 0.1 mm.

NOTICE If necessary, cut the end of the FireDETEC® sensor tubing off evenly with our special FireDETEC® tube cutter.

(3) Press a tubular stiffener (Art. No. B07830023) into the FireDETEC® sensor tubing as far as it will go.



(4) Put the tightening nut, which is part of the L-Fitting for FireDETEC® tube connection (Art. No. B07830025), with its two rings on the FireDETEC® sensor tubing with the thread of the screw facing to the end of the FireDETEC® sensor tubing.

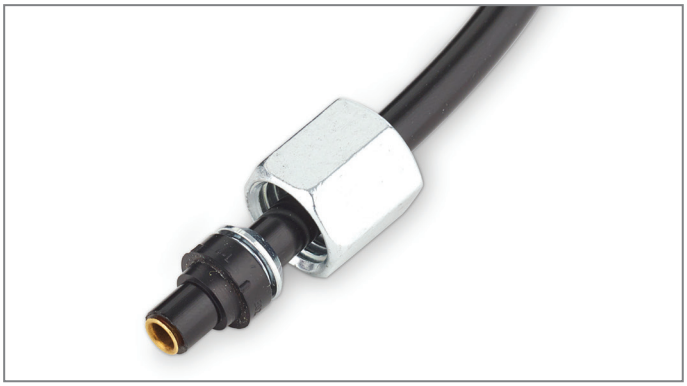

(5) Screw the tightening nut by hand to the end of line adapter.

(6) Tighten the nut with a torque of 10 Nm by using a torque wrench.

(7) Route the FireDETEC® sensor tubing close to the hazard area. For effective fire protection place the FireDETEC® sensor tubing above hazard areas. Fix the FireDETEC® sensor tubing every 500 mm maximum with our special clips for attachment. The minimum bend radius for the FireDETEC® sensor tubing is 150 mm.

NOTICE

Do not install the FireDETEC® sensor tubing too close to hot surfaces or vibrating parts, because it might deflect due to vibrations and/or the temperature changes. Use more special clips for attachment to prevent unwanted movement.
In case of limited space around the FireDETEC® sensor tubing position, contact CEODEUX Extinguisher Valves Technology S.A. or an authorized representative.

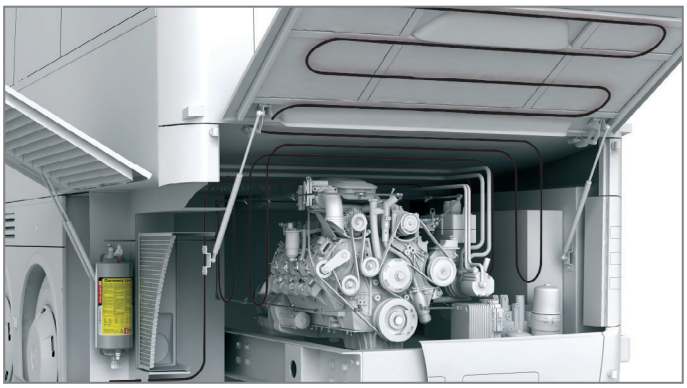

(8) Make sure, that the FireDETEC® sensor tubing is long enough to connect the other end to the Compact Line.

(9) Press a tubular stiffener (Art. No. B07830023) into the FireDETEC® sensor tubing as far as it will go. Refer to the picture in step 3.

(10) Put the tightening nut, which is part of the L-Fitting for FireDETEC® tube connection (Art. No. B07830025), with its two rings on the FireDETEC® sensor tubing with the thread of the screw facing to the end of the FireDETEC® sensor tubing. Refer to the picture in step 4.

(11) Screw the tightening nut by hand to the male elbow connector (Art. No. B07830025).

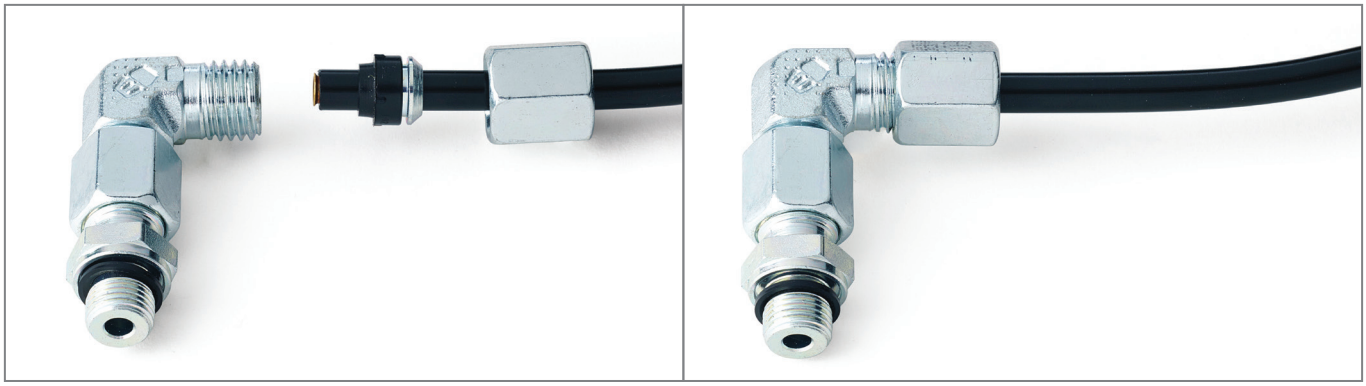

(12) Tighten the nut with a torque of 10 Nm by using a torque wrench.

(13) Connect the male elbow connector (Art. No. B07830025) to the FireDETEC® tube connection port (G1/8'') ⑧ of the Compact Line. Tighten it with a torque of 10 Nm.

NOTICE

Make sure that all parts are clean and free of dust.

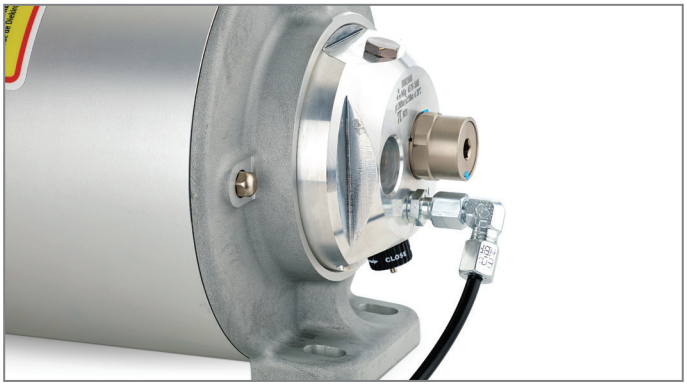

6.9.1 Pressurizing the FireDETEC® sensor tubing

(1) Make sure that all connections to the end of line adapter and Compact Line (low pressure side) are secured and tightened.

(2) Attach the filling adapter (Art. No. B07810005) to the end of line adapter.

(3) Use filling kit B07502000 (empty) or B07502500 (filled) for pressurizing the FireDETEC® sensor tubing with nitogen to 16 bar at 20°C.
If the ambient temperature is higher, the fill pressure may be higher until the correct pressure is attained.



(4) Check the FireDETEC® sensor tubing pressure with the end of line pressure gauge:
Remove the filling adapter and screw the pressure gauge and the O-Ring to the end of line adapter.
If the pressure in the FireDETEC® sensor tubing is correct, the pressure gauge indicates a pressure of 16 bar

(5) Perform the leak test procedure: Apply a soapy water solution to all connections and check for bubbles. Wait for about 30 to 45 minutes. Make sure that there are no leaks.

(6) Check the FireDETEC® sensor tubing with the pressure gauge to make sure that the pressure is stable.

(7) If there is a leak in the FireDETEC® sensor tubing or in its connections, restart from chapter 6.8 “Installation of the FireDETEC® sensor tubing”.

(8) If there are no leaks, the FireDETEC® sensor tubing is correctly installed.

6.9.2 Putting the system into operation

(1) Before you open the isolation valve ⑨ at the Compact Line, check if

- the discharge line is correctly installed and secured
- the FireDETEC® sensor tubing is correctly installed and pressurized
- the Compact Line is fixed correctly
- all connections are free of leaks
- all screws are tightened

(2) If all requirements from step 1 are met, slowly open the isolation valve ⑨ at the Compact Line in order to arm the system.

(3) Make sure, that the bonded seal is present. Refer to step 2 in chapter 6.3. Screw the bleed valve ⑦ back onto the Compact Line and tighten it with a torque of 15 Nm.

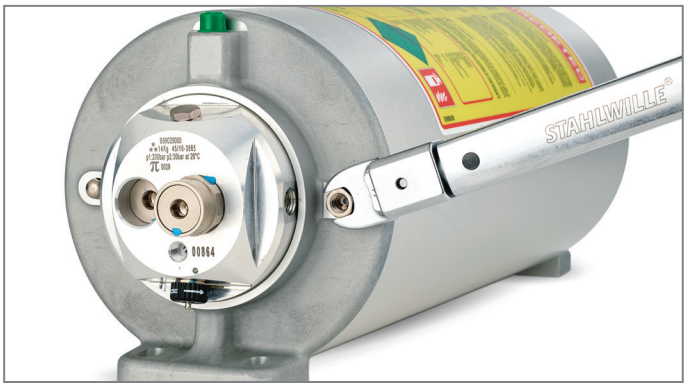

(4) Make sure that the isolation valve ⑨ is fully open, and seal it.

NOTICE Do not remove the seal, except for maintenance and inspection.

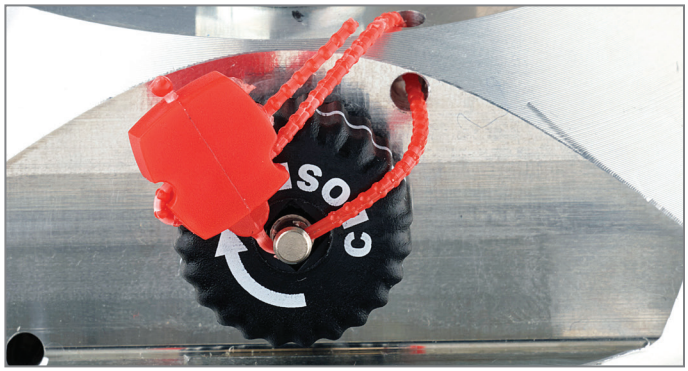

7 Resetting the system after a fire

7.1 General

It is the responsibility of the installer to make sure that the installation is performed in accordance with existing regulations, rules and guidelines including requirements of the Governmental and/or Local Authority and other regulatory authorities.The installation rules in chapter 6.1 still apply.

NOTICE

If the extinguishing agent FireDETEC® TS55 is used, the engine compartment must be cleaned with clear water immediately after a discharge.
FireDETEC® TS55 is corrosive to metals such as zinc or galvanized steel. An exposure of FireDETEC® TS55 to those materials over a longer period may damage them.

After a fire, the FireDETEC® sensor tubing must be completely replaced, and the discharge line must be cleaned with clear water. The Compact Line must be recharged or replaced.
Additionally, all parts of the system must be given a visual inspection.

7.2 Additional tools for resetting the system

All tools as defined in chapter 6.2 are necessary for resetting, along with the following:

- FireDETEC® sensor tubing black (Art. No. B07800200 (100m) or Art. No. B07800202 (10m))
- New rubber disc (Art. No. 022500006) for hollow screw (Art. No. 023107028)

7.3 Disassembly and cleaning

(1) Disconnect the FireDETEC® sensor tubing from the Compact Line, and from the structure of the protected area, and from the end of line pressure gauge.
(2) Disconnect the discharge line from the Compact Line and clean it with clear water.
(3) Make sure that the nozzles are not clogged by particles. Use compressed air to clean clogged nozzles.
(4) Remove the pressure switches.
(5) Unscrew the M10 (8.8) bolts of the Compact Line. Keep the bolts and the DIN 434 square taper washer for U-sections in a safe place.
(6) Remove all residues of the extinguishing agent and fire traces in the area where the Compact Line will be mounted.

7.4 Refilling the Compact Line

(1) Place the Compact Line on a flat surface.
(2) Remove the seal of the isolation valve ⑨.
(3) Check if the isolation valve ⑨ is open. If not, open it.

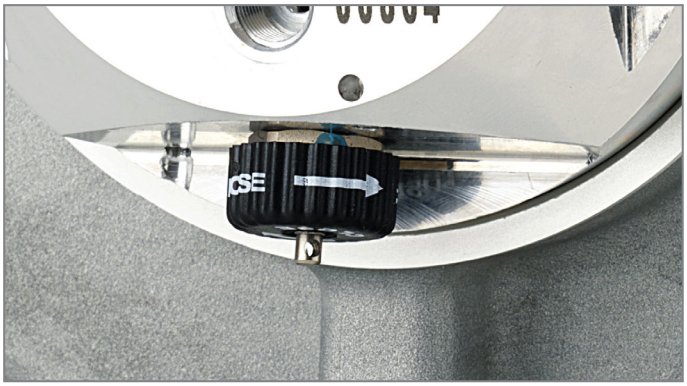

(4) Unscrew the bleed valve ⑦.

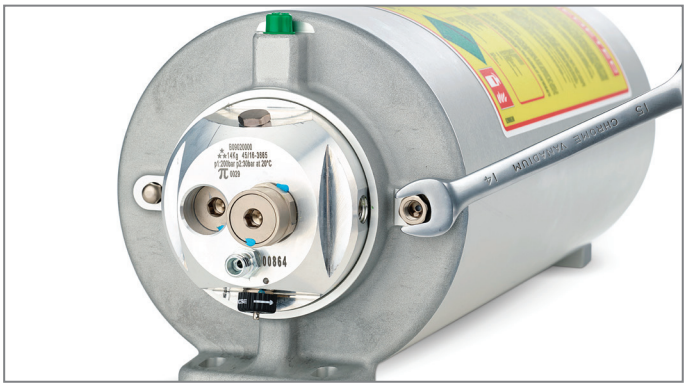

(5) Unscrew the outlet adapter on the outlet/discharge port (M18x1.5) ⑩ .

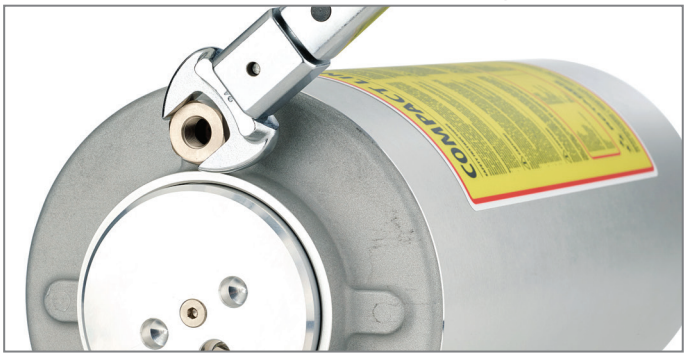

(6) Remove the hollow screw.

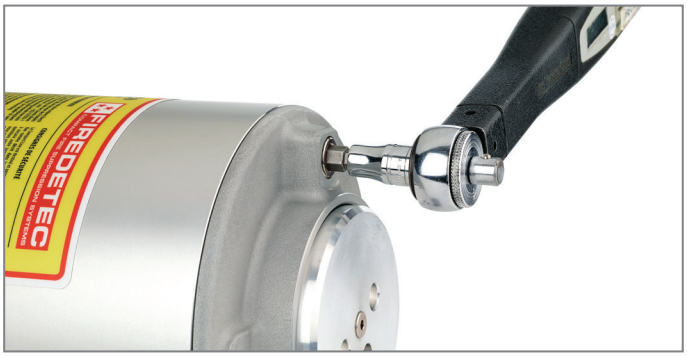

(7) Place the compressed air gun on the outlet/discharge port (M18x1.5) ⑩.

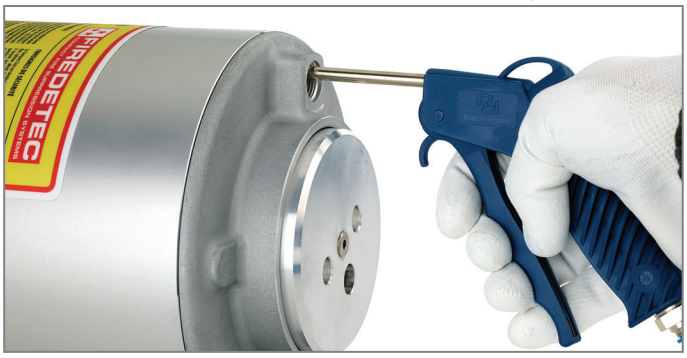

(8) Charge the piston with compressed air by pushing the compressed air gun on the outlet/discharge port (M18x1.5) ⑩ until the piston inside the chamber of the Compact Line moves back into its original starting position. When it does, the piston position indicator ③ projects out:



(9) Place the compressed air gun in the FireDETEC® tube connection port (G1/8'') ⑧ and apply pressure for a few seconds to reset the system.

(10) Close the isolation valve ⑨.

(11) Refer to chapter 6.3. Perform steps 3 to 16 for refilling the Compact Line.

7.5 Connecting the pressure switches to the Compact Line

(1) Refer to chapter 6.5 and perform all steps as described in this chapter.

7.6 Mounting the Compact Line

(1) Refer to chapter 6.6 and perform all steps as described in this chapter.

7.7 Installation of the discharge line

(1) If you are installing a new discharge line, refer to chapter 6.7 and perform all steps as described in this chapter. You can also re-use the existing discharge line after cleaning.

(2) Clean the discharge line with clear water.

(3) Use compressed air to clean the nozzles. Refer also to chapter 7.3.

(4) Put new protection caps (Art. No. 028400055) on the nozzles.

7.8 Installation of the EM actuation system

(1) If you are using a FireDETEC® Compact Line System with EM actuation, refer to chapter 6.8 and perform all steps as described in this chapter.

7.9 Installation of the FireDETEC® sensor tubing

(1) If you are using a FireDETEC® Compact Line System with FireDETEC® actuation, refer to chapter 6.9 and perform all steps as described in this chapter.

NOTICE The FireDETEC® sensor tubing must be replaced completely with a new part.

7.10 Pressurizing the FireDETEC® sensor tubing

(1) Refer to chapter 6.9.1 and perform all steps as described in this chapter.

7.11 Putting the system into operation

(1) Refer to chapter 6.9.2 and perform all steps as described in this chapter.

8 Malfunctioning

Malfunctioning of the FireDETEC® Compact Line System can be caused by dirt or dust. Therefore, it is absolutely essential that only clean Compact Lines are used and that the extinguishing agent is free of contamination.

9 Final system check out

The final checkout procedures outlined in this chapter are intended to represent the minimum requirements for the extinguishing portion of the system. The various steps must be checked by both installer and end user. Additional procedures may be required by the applicable governmental or regulatory authority.

The final system check out form in the appendix of this document must be completed jointly by the end user and the installer for the limited warranty to apply. The installer must be properly trained, either by the manufacturer or by an authorized person. The final system checkout form must be sent back to the manufacturer:

CEODEUX Extinguisher Valves Technology S.A., Fax: +352 32 78 32-326, Email: firetec@rotarex.com

Check out procedures for each system:

- A global visual inspection must be performed to make sure that all components (FireDETEC® Compact Line, brackets, FireDETEC® sensor tubing, etc.) are fastened securely. Check also if all fittings of the discharge line are properly tightened.
- Check all pressure gauges. They must indicate 16 bar at 20°C ambient temperature.

  NOTICE The pressure gauge needle must be in the green area. Refer to picture (a). Use a marker to mark the exact position of the needle. This makes it easier to check the proper tightness of the FireDETEC® sensor tubing at regular intervals.
- Check if the isolation valve ⑨ is open: this means that the Compact Line pressure and FireDETEC® sensor tubing are stable and that the FireDETEC® Compact Line system is ready for use.
- Check if the bleed valve ⑦ is screwed onto the Compact Line and tightened.
- Check the bend radius of the FireDETEC® sensor tubing. Refer to picture (b).
  - The minimum bend radius is 150 mm.
- Check if the FireDETEC® sensor tubing is not cut, kinked or crushed and that the FireDETEC® sensor tubing has the FireDETEC® sensor tubing marking.
- Check the placement of the clips for attachment of the FireDETEC® sensor tubing
  - The maximum distance between two clips must not exceed 500 mm.
- Control the position of the FireDETEC® sensor tubing. The FireDETEC® sensor tubing must not be in direct contact with vibrating parts or surfaces which exceed the temperature range of the FireDETEC® sensor tubing. A reasonable distance must be respected.
- Do a leak test on all system connections to make sure that there is no leakage.

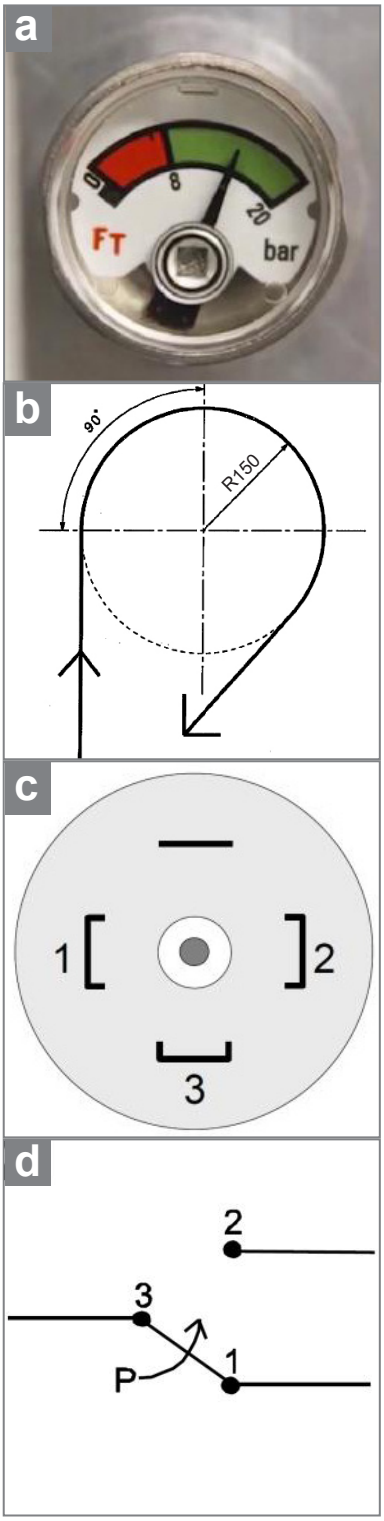

Optional

If a pressure switch is installed, check the device with an ohmmeter following these instructions.

- Check the switches at the electrical connections when the Compact Line is pressurized. Refer to picture (c).
  - Between 1 and 3, the circuit must be opened. Refer to picture (d)
  - Between 2 and 3, the circuit must be closed (0Ω)
- Unscrew the pressure switch until the depressurization of the device and check the switches:
  - Between 1 and 3, the circuit must be closed (0Ω).
  - Between 2 and 3, the circuit must be opened.

Final system check out form

You can find the form to fill out at the end of this Installation and Maintenance Manual.
Obey the instructions on the corresponding forms!

General information

End user _____

Address _____

_____

Protected device _____

Constructor _____

Type _____

Serial number _____

Inventory number _____

Date of commissioning _____

Check out procedures

For each system	Checked	Remarks
Global visual inspection	☐	
Pressure gauge checking	☐	
Isolation valve position	☐	
Bleed valve presence and tightness	☐	
Bend radius of the FireDETEC® sensor tubing	☐	
Orientation of the Compact Line	☐	
Contact with parts subject to exceed temperature range	☐	
Leak detection	☐	
35 bar test of the discharge line	☐	
Distance between nozzles / fittings and brackets	☐	

Only for FireDETEC® actuation	Checked	Remarks
Condition of the FireDETEC® sensor tubing	☐	
Tube clips placement	☐	

Only for EM actuation	Checked	Remarks
Connection of the EM coil	☐	

Optional	Checked	Remarks
Pressure switch 160 bar	☐	
Pressure switch 5 bar	☐	

End user comments

_____

_____

_____

_____

Commissioning performed in presence of

Date	Signature end user representative	Signature installer representative

SAMPLE PAGE

10 Maintenance

10.1 General

The FireDETEC® Compact Line System must be maintained only by qualified personnel, that is responsible for adhering to the existing regulations, rules and guidelines including requirements of the Governmental and / or Local Authority and other regulatory authorities. Refer also to chapter 2 “Intended use”.

10.2 Maintenance programme

The following maintenance programme must be obeyed for the continuous operation of the FireDETEC® Compact Line System. A maintenance log must be maintained for ready reference. Each maintenance must be performed by a qualified inspector who is properly trained, either by the manufacturer or by an authorized person.

The log must include data of

- Inspection date
- Inspection interval
- Name of inspector
- Inspection procedure performed
- Maintenance performed as a result of the inspection
- Maintenance checklist (The maintenance checklist is available in appendix 3 of this Installation and Maintenance Manual and can also be downloaded from http://rotarexfiretec.com).

10.3 Maintenance intervals

The following steps must be performed every month:

(1) Check the Compact Line and all parts of the FireDETEC® Compact Line System for physical damage, deterioration or corrosion. If any deterioration or corrosion is visible, replace the damaged parts. Replace all corroded parts.

(2) Check all support brackets. Tighten loose fittings.

(3) Check the FireDETEC® sensor tubing. Make sure that there are no kinds of abrasion, cuts, kinks. If there are kinds of abrasion, cuts, kinks replace the FireDETEC® sensor tubing.

(4) Remove dirt and dust from the FireDETEC® sensor tubing.

(5) Make sure that the FireDETEC® sensor tubing is free of obstructions that would prevent the detection of a fire.

(6) Make sure that every nozzle is protected by a protection cap. If the protection cap is missing, put a new protection cap on the nozzle and make sure, that the nozzle is not clogged. Use compressed air to clean clogged nozzles.

(7) Make sure that the pressure in the Compact Line is correct.
- If your system is monitored, check the proper functioning of the pressure switches, and that they indicate the right pressure.
- If your system is not monitored, check the pressure using the pressure gauges.

(8) Make sure that the piston is still in its correct starting position by checking if the piston position indicator ③ is still projecting out.

One (1) year maintenance procedure:

(1) Remove the flexible stainless steel hose from the outlet/discharge port (M18x1.5) ⑩. If there is extinguishing agent in the flexible stainless steel hose, the rubber disc in the outlet/discharge port (M18x1.5) ⑩ may be broken and needs replacement. After maintenance, screw the flexible stainless steel hose into the outlet/discharge port (M18x1.5) ⑩ and tighten it.

(2) If a pressure switch 160 bar is plugged on the high pressure monitoring port ⑫, unscrew it and plug the high pressure monitoring port ⑫ with the pressure gauge 0 - 350 bar (Art. No. 029720059). If the pressure has dropped below 195 bar at 20°C, unscrew the pressure gauge and replace it with the gas filling adapter (Art. No. 029510053). Pressurize the Compact Line to 200 bar at 20°C.
Unscrew the filling adapter and plug the gauge or pressure switch back.

Five (5) year maintenance procedure:

The FireDETEC® sensor tubing must be completely replaced every five (5) years.

Ten (10) year maintenance procedure:

The extinguishing agent must be replaced every ten (10) years.

Maintenance procedure according to local regulation:

Every five (5) or ten (10) years depending on the local regulation, the Compact Line must be retested.

NOTICE Contact your local authority or government for further information.

11 Recycling and disposal

The packaging of the FireDETEC® Compact Line System and the Compact Line must be handed over to a proper disposal organisation.
The disposal of the Compact Line must only be conducted by qualified specialists.

⚠ CAUTION Always empty the high pressure chamber and the low pressure chamber of the Compact Line before disposing the Compact Line!

12 Technical data

Compact Line						
Art. No.	B09024000	B09024010	B09025000	B09025010	B09023000	B09023010
Corresponding Compact Line No.	B09020200	B09020210	B09020000	B09020010	B09020100	B09020110
Volume of extinguishing agent	4 liters	4 liters	7 liters	7 liters	12 liters	12 liters
Fire detection	FireDETEC® actuation	EM actuation	FireDETEC® actuation	EM actuation	FireDETEC® actuation	EM actuation
Outer diameter	190 mm					
Length	385 mm	445 mm	544 mm	604 mm	809 mm	869 mm
Weight empty	9,5 kg	9,8 kg	11,8 kg	12,1 kg	15,6 kg	15,9 kg
Weight full	13,6 to 14,7 kg		19,0 to 20,9 kg		28,0 to 31,2 kg	
Material	Compact Line, flanges, heads, piston: aluminium alloy Fittings, springs: stainless steel Other metallic parts: nickel-plated brass O-Rings: EPDM Other plastic parts: PTFE, PE, PA6.6, POM					
Operating and storage temperature	Refer to the table on page 14					
Pressure in the high pressure chamber of the Compact Line	200 bar at 20°C					
Pressure in the low pressure chamber of the Compact Line	30 bar at 20°C					
Pressure in the FireDETEC® sensor tubing	16 bar at 20°C					
System mounting	4 bolts M10 (8,8) and 4 DIN 434 square taper washers for U-sections 8%					
Axis dimension of fixation holes (Lxe)	315 mm x 60 mm		474 mm x 60 mm		739 mm x 60 mm	
Extinguishing agent	FireDETEC® TS55 Berki Cold®					
Gas for the high pressure chamber of the Compact Line	Nitrogen					

General dimensions of the Compact Line (in mm)

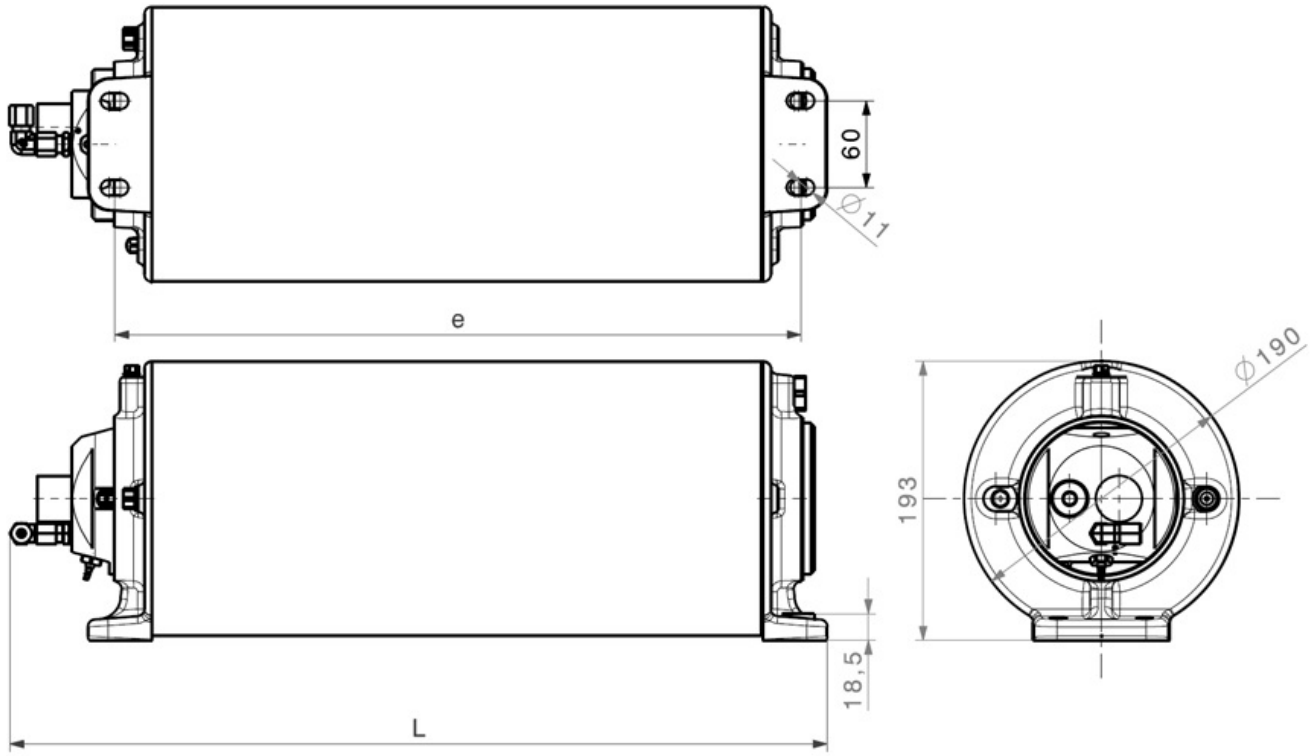

13 Guarantee and warranty

For guarantee and warranty refer our general terms and conditions.

This installation and maintenance manual is an integral part of the sales contract and is subject to our general terms and conditions.

14 Revision history PG.G.04.004

Index	Modification number	Modification	Date	Checked / approved by
-	-	Initial version	2014/06/01	S. Edlinger
c	B17127	General revision	2017/10/25	F. Desnoes
d	B17136	Revision after SP audit	2017/11/28	F. Desnoes

ROTAREX FIRETEC

Risk assessment form according to SPCR 183

This form is only for SP approved systems! This form must be completed and signed by an installer, who is properly trained, either by the manufacturer or by an authorized person. The completed and signed form must be sent back to the manufacturer: CEODEUX Extinguisher Valves Technology S.A., Fax: +352 32 78 32-326, Email: firetec@rotarex.com

General information

Address _____

_____

Protected device _____

Constructor _____

Type _____

Serial number _____

Inventory number _____

Date of commissioning _____

Ordering codes - *Please fill in the required quantity*

Art. No.	Qty.	Description
Extinguishing System		
B09023000	_____	Compact Line 12 liters with FireDETEC® actuation
B09023010	_____	Compact Line 12 liters with EM actuation
B09025000	_____	Compact Line 7 liters with FireDETEC® actuation
B09025010	_____	Compact Line 7 liters with EM actuation
B09024000	_____	Compact Line 4 liters with FireDETEC® actuation
B09024010	_____	Compact Line 4 liters with EM actuation
B0902_____	_____	Other Compact Line articles
Components for discharge line - Fittings		
B07835026	_____	G1/4” Tube fitting (ø 8mm)
B07835027	_____	Straight fitting (ø 8mm)
B07835028	_____	Elbow fitting (ø 8mm)
B07835029	_____	T-Fitting (ø 8mm)
B07835030	_____	Rc 1/8” threaded T-fitting
B07835031	_____	Rc 1/8” threaded elbow fitting
B07835033	_____	Cross fitting (ø 8mm)
B07835037	_____	Cross panel fitting (ø 8mm)
Components for discharge line - Nozzles		
026205098	_____	6-90° full cone nozzle
026205133	_____	6-45° full cone nozzle
026205137	_____	9-90° full cone nozzle (high flow)
Components for discharge line - Brackets		
B07860006	_____	Pipe bracket (ø 8mm)

Art. No.	Qty.	Description
Components for discharge line - Pipe / Tube		
022700599	_____	Stainless steel pipe (ø 8x1mm) L=1m
022720039	_____	Flexible stainless steel hose L=1,25m
022720040	_____	Flexible stainless steel hose L=0,6m
Components for detection line - Sensor tubing		
B07800200	_____	FireDETEC® sensor tubing black (100m)
B07800202	_____	FireDETEC® sensor tubing black (10m)
Components for detection line - Fittings		
B07830021	_____	Elbow fitting (ø 6mm)
B07830022	_____	T-fitting (ø 6mm)
B07830023	_____	Brass insert for tube fixation
B07830024	_____	G1/8” Straight fitting (ø 6mm)
B07830025	_____	G1/8” Elbow fitting (ø 6mm)
Components for detection line		
B07860002	_____	Clip for attachment of the FireDETEC® sensor tubing (ø 6mm)
B07850030	_____	Protection spring for FireDETEC® sensor tubing L=10 m
End of line adapter		
B07810025	_____	End of line adapter with gauge / filling port
B04420142	_____	Solenoid actuator (24V/9W) with gauge
B04420143	_____	Manual actuator with gauge / filling port
B04420145	_____	Manual actuator with gauge / filling port and aluminium body
Pressure switches		
028255047	_____	Pressure switch 160 bar
028255048	_____	Pressure switch 5 bar

For additional information or components refer to our Compact Line price list!

Protected fire risks

- ☐ Turbocharger
- ☐ Manifold / Muffler
- ☐ Injection line
- ☐ Fuel hoses
- ☐ Battery
- ☐ Electrical control units
- ☐ Auxiliary heater
- ☐ Hydraulic components
- ☐ Air conditioner
- ☐ Heat and noise insulation
- ☐ Generators
- ☐ Other _____

Dimensioning

			Remarks
Gross volume of engine compartment	_____	m^3	_____
Type of agent	☐ FireDETEC® TS55 ☐ Berki Cold®		_____
* Volume of needed agent	_____	l	_____
* Quantity of nozzles	_____		_____
Operating temperature range	_____ - _____	°C	_____
Estimation of air flow in the engine compartment	_____	m^3/s	_____

* Refer to chapter 2.2

Installation sketch - *Please make a detailed drawing of the planned installation and add fire risk sources / components in cube form depending on their fire risk potential*

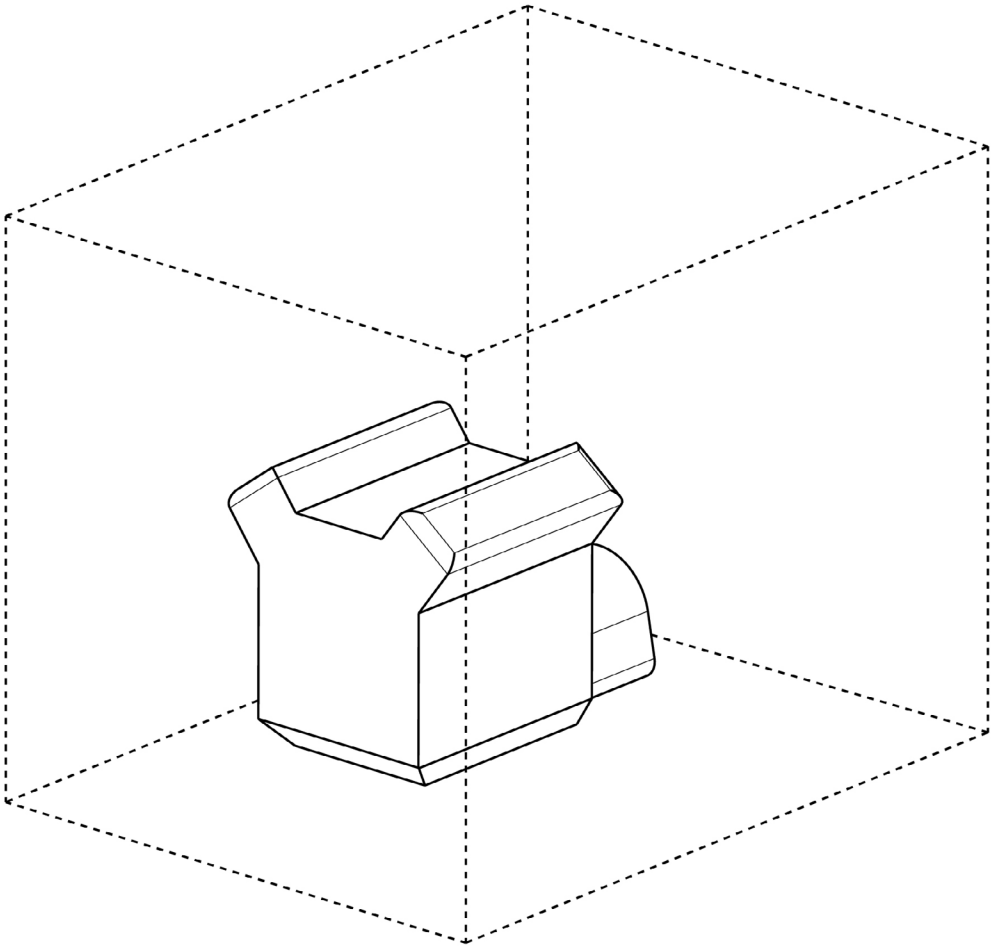



small cube = low fire risk

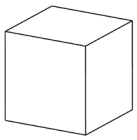

medium cube = medium fire risk

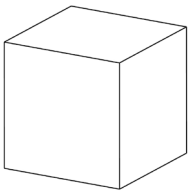

big cube = high fire risk

Comments

_____

_____

_____

Commissioning performed in presence of

Date	Signature end user representative	Signature installer representative

ROTAREX FIRETEC

Final system check out form

The form must be completed and signed by the installer and by the end user. The installer must be properly trained, either by the manufacturer or by an authorized person. The completed and signed form must be sent back to the manufacturer:

General information

End user _____

Address _____

_____

Protected device _____

Constructor _____

Type _____

Serial number _____

Inventory number _____

Date of commissioning _____

Check out procedures

For each system	Checked	Remarks
Global visual inspection	☐	
Pressure gauge checking	☐	
Isolation valve position	☐	
Bleed valve presence and tightness	☐	
Bend radius of the FireDETEC® sensor tubing	☐	
Orientation of the Compact Line	☐	
Contact with parts subject to exceed temperature range	☐	
Leak detection	☐	
35 bar test of the discharge line	☐	
Distance between nozzles / fittings and brackets	☐	

Only for FireDETEC® actuation	Checked	Remarks
Condition of the FireDETEC® sensor tubing	☐	
Tube clips placement	☐	

Only for EM actuation	Checked	Remarks
Connection of the EM coil	☐	

Optional	Checked	Remarks
Pressure switch 160 bar	☐	
Pressure switch 5 bar	☐	

End user comments

_____

_____

_____

_____

Commissioning performed in presence of

Date	Signature end user representative	Signature installer representative

Maintenance checklist according to chapter 10.3

Obey all safety and maintenance instructions in this Installation and Maintenance Manual (article number 027650022), as well as national and local regulations for the implementation of the maintenance.

General information

Company name (end user)		**Date of check**	
Company name (maintenance)		**Check performed by**	First name / last name
Vehicle type		**Vehicle reference**	
		Serial number	___ ___ ___ ___ ___
Compact Line article number	**B0902** ___ ___ ___ ___	**Week/year of production - XXXX**	_____ / _____ - ___ ___ ___ ___

Part 1 Visual check

Compact Line, discharge line and FireDETEC® sensor tubing

	OK	Not OK	List the parts that are Not OK / comments
Check for physical damage	☐	☐	
Check for corrosion	☐	☐	
Check for deterioration	☐	☐	

Part 2 Functional check

FireDETEC® sensor tubing

	OK	Not OK	List the parts that are Not OK / comments
Check all support brackets	☐	☐	
Check the condition of the FireDETEC® sensor tubing	☐	☐	
Check the layout of the FireDETEC® sensor tubing	☐	☐	
Check if the engine compartment has not changed (refer to the Risk assessment form according to SPCR 183)	☐	☐	

Part 3 Functional check

Discharge line

	OK	Not OK	List the parts that are Not OK / comments
Check all support brackets	☐	☐	
Check all fittings	☐	☐	
Check the layout of the discharge line	☐	☐	
Check if each nozzle is protected by a protection cap	☐	☐	

Part 4 Filling check

Extinguishing agent

	OK	Not OK	List the parts that are Not OK / comments
Check the position of the piston position indicator	☐	☐	

Part 5 Functional check

Compact Line

	OK	Not OK	List the parts that are Not OK / comments
Check the pressure in the Compact Line and note it (P = 200 ± 5 bar at 20 ± 2 °C)	☐	☐	_____ bar
Check the temperature in the Compact Line and note it	☐	☐	_____ °C

Part 6 Optinal check

In accordance with the assessment of the maintenance technican

	OK	Not OK	List the parts that are Not OK / comments
Check if pressure switches are used	☐	☐	
Test the pressure switch 160 bar (refer to chapter 9)	☐	☐	
Test the pressure switch 5 bar (refer to chapter 9)	☐	☐	

Part 7 Additional annual check

	OK	Not OK	List the parts that are Not OK / comments
Check the outlet rubber disc	☐	☐	
Refill the Compact Line (P = 200 ± 5 bar at 20 ± 2 °C)	☐	☐	

Part 8 Additional check every 5 years

	OK	Not OK	List the parts that are Not OK / comments
Replace the FireDETEC® sensor tubing	☐	☐	
Retest or replace the Compact Line (depending on local regulation)	☐	☐	

Part 9 Additional check every 10 years

	OK	Not OK	List the parts that are Not OK / comments
Replace the extinguishing agent	☐	☐	
Retest or replace the Compact Line (depending on local regulation)	☐	☐	

Part 10 Final checkout

	OK	Not OK	List the parts that are Not OK / comments
Check if the discharge line is connected to the Compact Line	☐	☐	
Check if the FireDETEC® sensor tubing is pressurized and free of leaks	☐	☐	
Check if the isolation valve is open	☐	☐	
Check if the isolation valve is sealed	☐	☐	
Check if the bleed valve is present and tightenend	☐	☐	

General validation

	YES	NO	List the actions / comments
Is corrective action required?	☐	☐	
Were minor corrective actions performed?	☐	☐	
Were major corrective actions performed?	☐	☐	
Is the system operative?	☐	☐	
Date of next maintenance			

Signature of the maintenance technican _____