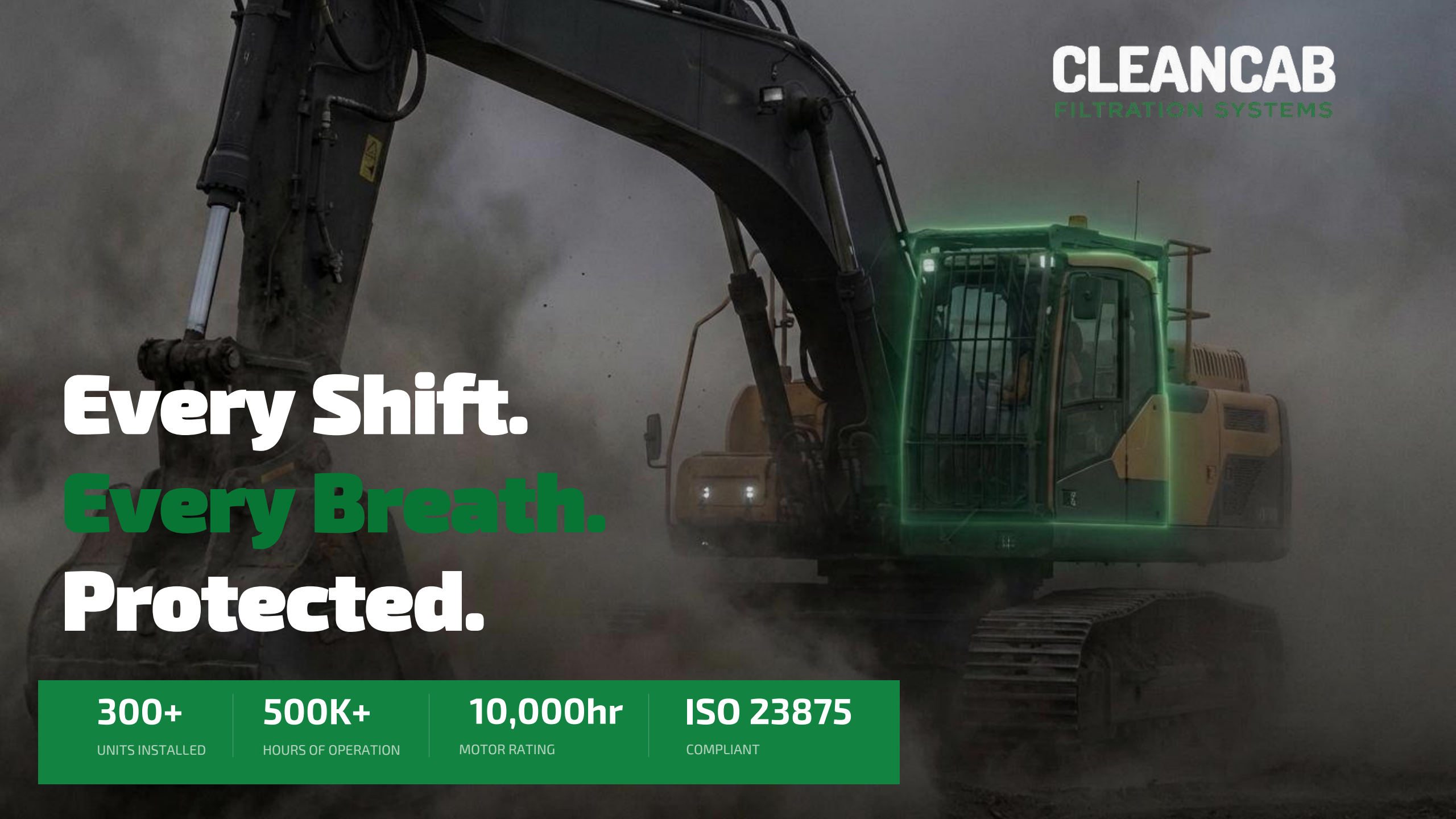
CLEANCAB
FILTRATION SYSTEMS
Every Shift.
Every Breath.
Protected.
300+
UNITS INSTALLED
500K+
HOURS OF OPERATION
10,000hr
MOTOR RATING
ISO 23875
COMPLIANT

The Air Quality Challenge. The Importance of ISO 23875.

The hidden threats to operators in heavy industries



Harsh Environments:
The nature of mining, civil and agriculture activities create sites where safe atmospheric contaminant levels are exceeded.

Elevated CO_2 Levels :
Poor ventilation inside cabins allows CO_2 build up, leading to fatigue, slower reaction times and reduced cognitive performance

Respirable Dust:
Microscopic silica and fine particulate matter can penetrate deep into the lungs, causing long-term respiratory disease such as silicosis.

Compliance Risks:
Without monitoring and verification, operators may be unknowingly exposed to harmful airborne contaminants risk.

ISO 23875 sets the standard with a systematic approach that solves the operator cabin air quality challenge

- **Positive Cabin Pressurisation:** requires sustained positive pressure inside the cab, preventing dust ingress.
- **Efficient Filtration:** requires high-efficiency filtration and controlled cabin pressurisation to prevent respirable dust from entering the operator enclosure.
- **Cabin Monitoring & Alarm:** mandates continuous monitoring of cabin CO_2 & pressure levels using NDIR sensors, with visual and audible alarms when strict thresholds are exceeded.
- **Life Cycle auditing:** requires continuous data logging, regular filter maintenance intervals and yearly system calibration.

CLEANCAB
FILTRATION SYSTEMS

Why HVACs Fail to keep air safe. Why CleanCab Outperforms.

The Anatomy Clean Air vs. HVAC

01 **Insufficient Fan Pressure:**
Standard fans cannot maintain the >20Pa pressure required to keep dust from the cab.

02 **Standard Filtration:**
Conventional cellulose filters clog quickly, are susceptible to media bunching allowing particles to bypass and lack HEPA-level efficiency.

03 **Cabin Leaks:**
OEM cabin seal effectiveness can be variable. No positive pressure shield, allows particles to suck right through failing door and window seals.

04 **No System Assurance:**
Without install certification & testing, built-in monitoring and alerts & filter replacement records, operator air quality can't be assured.

Why CleanCab is the right choice for you

CleanCab systems are engineered from **over 20 years of real-world air system installation experience** in demanding mining, quarry, and heavy equipment environments.

It is a **fully integrated cabin air safety system** designed to **meet and exceed ISO 23875 requirements**, providing operators with reliable protection from hazardous airborne contaminants.

Developed by an experienced **air-conditioning and diesel mechanical specialist**, CleanCab is designed with **serviceability, reliability, and total cost of ownership** at its core.

CleanCab outperforms all others, protects your operators while helping reduce downtime, maintenance complexity, and operating costs.

Complete Clean Air Safety System	Engineered to ISO 23875	Built to suit its environment	Reduces Total Cost of Ownership (TCO)	Customer Support for the Long Run
Seamless integration of high-power pressuriser, multi-stage filtration, precision sensors, and in-cab alarms	Engineered from the ground up to meet strict international air quality specifications.	Made from high quality components with proven in-field hours. CleanCab is built for life in Australia's toughest mining conditions	Improved service intervals. Filter options (higher capacity & carbon). Individual part replacement options. App based servicing & smart diagnostics and firmware updates	**Parts Availability** guarantees. **24/7 Tech Support** via app-based trouble shooting, and a partner **network of highly skilled technicians across Australia**

CLEANCAB
FILTRATION SYSTEMS

The Anatomy of Clean Air. The CleanCab Filtration System.

Why CleanCab is the right choice for you

Pressuriser Unit

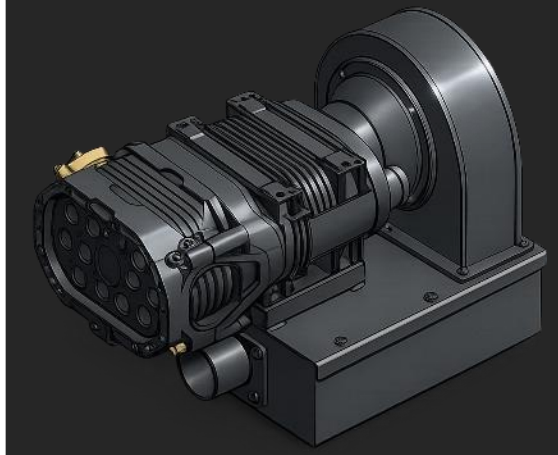

Advanced Pressuriser Unit
Overpowering Airflow: Utilises a heavy-duty brushless motor capable of 550 m^3/h (323 CFM) free flow and extreme static pressure (up to 600Pa) to overcome cabin leaks

Efficient Filtration



Primary Filtration
Integrates the heavy-duty Donaldson PowerCore® unit with a built-in cyclonic pre-cleaner, automatically ejecting heavy dirt and removing 99.97%

Secondary Filtration
Employs an individually certified, high efficiency H14 HEPA filter to capture final microscopic respirable particulate matter.

Sensor & Alarm



Continuous Precision Monitoring:
Nondispersive Infrared (NDIR) technology constantly samples cabin pressure, CO_2, temperature, and humidity. At real time this data is displayed into cabin monitor which will visually & audibly alert operator if thresholds are exceeded.

Assurance



Audit-Ready Digital Logging:
The system seamlessly pairs with the CleanCab App via Bluetooth, replacing paper logbooks by digitally recording alarm histories, exact filter run times, and commissioning records for simple compliance reporting

CLEANCAB
FILTRATION SYSTEMS

The CleanCab System. The Complete Air Safety System.

Pressuriser Unit



Sensor & Monitor



Digital App (Companion)



Filtration & Pressuriser Unit

- **Heavy-Duty Enclosed Variable Speed Motor**
  Brushless · Auto-adjusting Fan speed · 12V & 24V Power · 10,000hr / 2year warranty*
- **Donaldson Powercore™ & HEPA System**
  2-stage system · Powercore removes ~99.97% · H14 HEPA filter life extended · Carbon filter insert (optional inclusion with standard unit)
- **Configurable to any Model & Application**
  Horizontal & Vertical Install · Multiple ducting options · Weather protector (optional)

In-Cab Monitor & Precision Sensor

- **In-Cab Monitor**
  Large Colour Touch Screen · Integrated LED colour alert & audible alarm · multi-stage escalating alarm with configurable range
- **NDIR Sensor System**
  Real-time CO_2 + Pressure sensors · Integrated with Monitor & Fan · Accuracy ±3% · Altitude Compensation (available) · Capacity for extra sensors
- **Data Logging & Digital Connectivity**
  Pressure & CO_2 continuous recording, CANBUS ready,

Companion App

- **Operator App (safety & site operators)**
  Commission records · Real-time Dashboards · Alarm history · Filter-life control · CSV Exports
- **Technician App (authorised technicians)**
  Sensor Calibration (pressure & CO_2, annual cycle) · Alarm threshold and delay configuration via secure admin · Alarm threshold · Commissioning, fan speed test and CO_2 gain reports
- **Connected & Updated**
  Firmware Updates · System Diagnostics · Database exports

CLEANCAB
FILTRATION SYSTEMS

The Complete Air Safety System. The Pressuriser Unit

High-Capacity Pressuriser Unit



Compact footprint

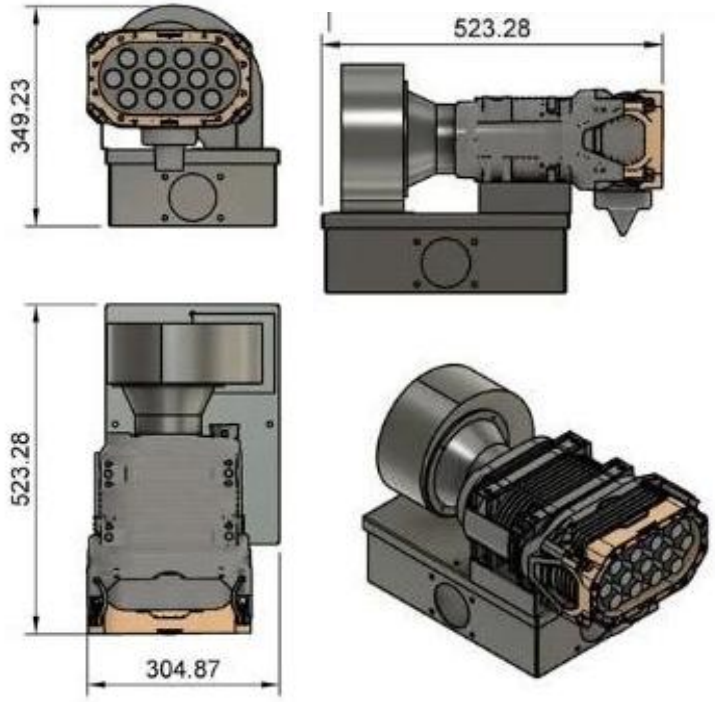

Semi-exploded view (filters)



PRESSURISER UNIT

High-Capacity Brushless Motor

Designed for continuous heavy-duty operation (24V @4.4A or 12V @ 5.2A). It is also super quiet, with operators noticing how much quieter CleanCab is vs. competitor units.

PRESSURISER UNIT

Massive Airflow

Capable of 550m3/h (323 CFM) free flow, and 178m3/h (105 CFM) operating load with all filters installed.

PRESSURISER UNIT

Extreme Static Pressure

Engineered to achieve 600Pa static pressure. Can overpower major cabin air leaks at max fan speed holding at 60Pa (compensates up to a 40mm hole).

PRESSURISER UNIT

Active Purge Cycle

Instantly ramps to 100% fan-speed at ignition start up to rapidly flush stale air and CO_2 from cabin

CLEANCAB
FILTRATION SYSTEMS

The Complete Air Safety System. The Filtration

CleanCab uses Donaldsons Industry proven air intake + PowerCore filter

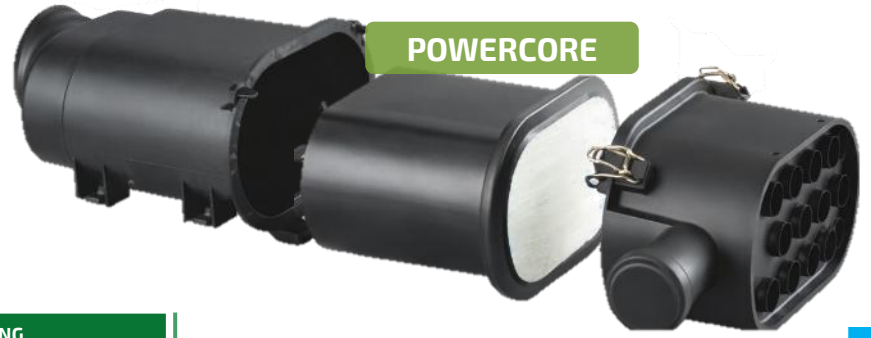

INTAKE & HOUSING

Integrated Pre-Cleaning

A built-in, high-efficiency pre-cleaner (utilising a drop tube and Vacuator™ Valve) removing heavy dust before it reaches the filter, maximising the main filter's service life

INTAKE & HOUSING

Non-Metal Construction:

Built with a rugged & durable, injection-molded plastic body that withstands medium to heavy dust environments without rusting



ULTRAWEB FILTER (OPTIONAL)

2x the Filter life

The optional Donaldson DBA9587 Ultra-Web filter provides ~2x dust holding capacity vs standard PowerCore filter. In high dust environments this can extend service intervals even further.

INTAKE & HOUSING

Flexible Mounting:

Compact footprint & integrated mounting brackets on 3 sides for extreme flexibility with added cost for mounting brackets

INTAKE & HOUSING

Tool-free Servicing

The housing is designed for rapid field maintenance, requiring absolutely no tools to unlock the latches, remove the cover, and replace the filter

POWERCORE FILTER

99.97% Efficiency

Outperforms conventional cellulose filters, achieving 99.97% overall efficiency in removing contaminants

POWERCORE FILTER

Contaminant Encapsulation

Accumulated dust and dirt stay securely contained inside the filter media during removal, protecting both the technician and the clean side of the intake during servicing

POWERCORE FILTER

Stable, Non-Metal Design

The filter media is completely non-metal and physically structured to ensure no media movement, expansion, contraction, or bunching under heavy airflow, ensuring reliable protection

CLEANCAB
FILTRATION SYSTEMS

Certified H14 HEPA Protection



HEPA FILTER

Maximum Protection

Blocks the ingress of hazardous particulate matter (including silica) from entering the breathing zone

HEPA FILTER

Upgraded Surface Area

Innovative one-piece H14 HEPA filter
Yields 25% more filtration surface area

HEPA FILTER

Rugged Construction

Upgraded with stainless-steel mesh on both top and bottom faces to prevent handling damage during field installation.

HEPA FILTER

Individually Certified

Every single filter is individually bench-tested and supplied with a unique paper EN1822 test certificate & QR code for digital tracking

The Complete Air Safety System. The Pressuriser Unit

The intelligence behind CleanCab, monitoring air quality, controlling pressure, and protecting operators in real time.



Monitor

Rugged Hardware Design

Shielded in CNC-machined aluminium housings

Monitor Unit ideal size for maximum operator view, whilst not obstructing vision.
105mm x 70mm x 30mm

Sensor Box compact unit for such power, dimensions allow it to be well positioned in even the tightest cab.
150mm x 90mm x 43mm



Sensor Box

Real time user interface



01

Real-time cabin pressure. Touch to mute alarms for 30 mins if in a Fail state.

02

Real-time CO_2 PPM. Touch to mute (30 mins for orange, 10 mins for red).

03

Current fan percentage. Turns red if speed exceeds warning threshold (indicating potential seal leak).

04

Toggles Temp/Humidity.

Filter status turns red when service hours are reached.

The Monitor

Touchscreen Display

Features a highly visual, colour-coded interface (Green = OK, Amber = Warning, Red = Fail) that provides operators with real-time, at-a-glance readings for cabin pressure, CO_2, fan speed, temperature, and humidity

The Monitor

Aerospace-Grade Housing:

Enclosed in a heavy-duty, CNC-machined anodised aluminium housing, completely eliminating the shatter-prone plastics used in standard systems

The Monitor

Active Audible Alarms:

Includes an integrated audible alarm that sounds automatically to ensure rapid operator awareness if cabin pressure drops to dangerous levels or CO_2 spikes

SENSOR BOX

PRECISION NDIIR

Employs highly accurate (±3%) Nondispersive Infrared (NDIR) sensors to continuously sample and track the exact cabin pressure and human-generated CO_2 levels

SENSOR BOX

Altitude Compensation

Features built-in atmospheric pressure and temperature sensors that automatically adjust CO_2 readings, guaranteeing flawless accuracy regardless of the mine site's elevation or changing weather

SENSOR BOX

Secondary Alerts & Diagnostics

Equipped with its own secondary audible alarm and an external LED status light (flashing green for normal, red for warnings) to aid technicians in rapid system checks

Thresholds & Alerts

Condition	Parameter	Visual Indicator	Audible Response
Pressure Thresholds			
Fail Range	<20 Pa or >200 Pa	Red Indicator immediately	Alarm sounds after 3 minutes (Muteable for 30 mins)
CO2 Thresholds			
Normal Operation	<900 PPM	Green (OK)	None
Warning Level	900–1,000 PPM	Yellow (Warning)	Monitor levels; no alarm
Fail State 1	1,000–2,500 PPM	Orange (Fail)	Alarm sounds after 3 minutes (Muteable for 30 mins)
Critical Fail State	>2,500 PPM	Red (Fail)	Alarm sounds after 3 minutes (Muteable for 10 mins MAX)

CLEANCAB
FILTRATION SYSTEMS

CAN BUS READY COMING SOON

CleanCab is engineered for CAN bus integration, fleet management and mine site SCADA systems. Planned data outputs include real-time CO2 and pressure, filter health status*, alarm events, fan speed and cumulative run hours – giving safety and maintenance teams site wide visibility without manual reporting.

Closed Loop System. Automatic Active Mitigation

CleanCab automatically makes micro-adjustments to fan speed to precisely maintain the target cabin pressure but it also takes action to cleanse the air without operator input



Automatic active mitigation, maintains the ecosystem without the operator input

Automated Startup Purge:

On Ignition instantly runs the fan at 100% capacity upon startup to rapidly flush the cabin, then steps down to target pressure (Pa)

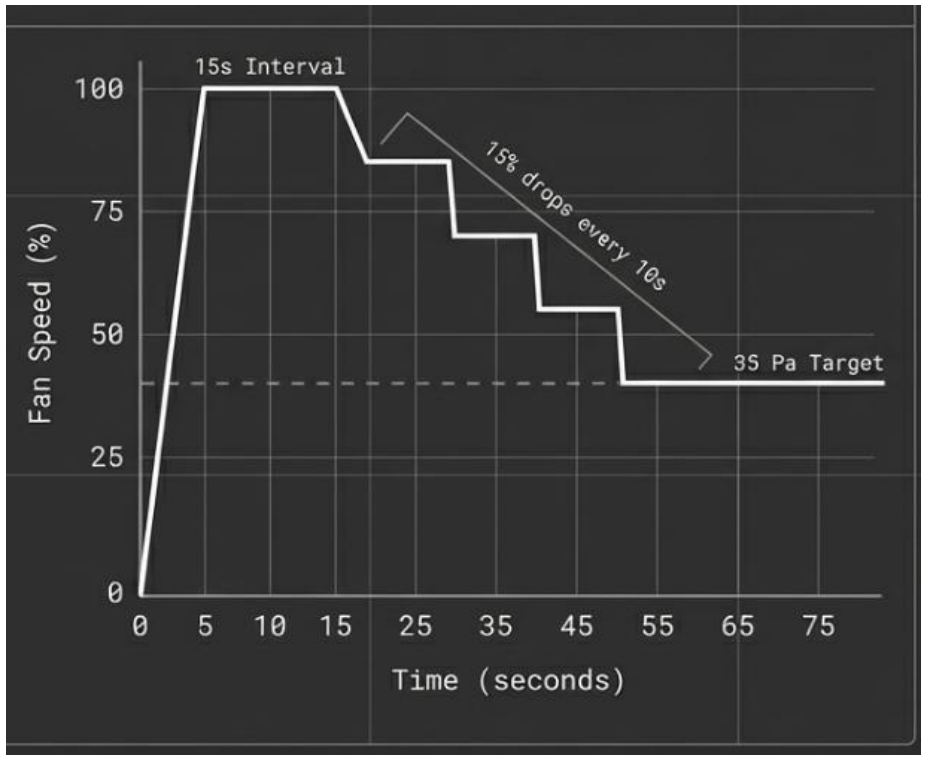

Active CO_2 Flushing

Automatically ramps up pressure to rapidly flush the cabin if CO_2 exceeds 1,200 ppm. Adjustable setting (

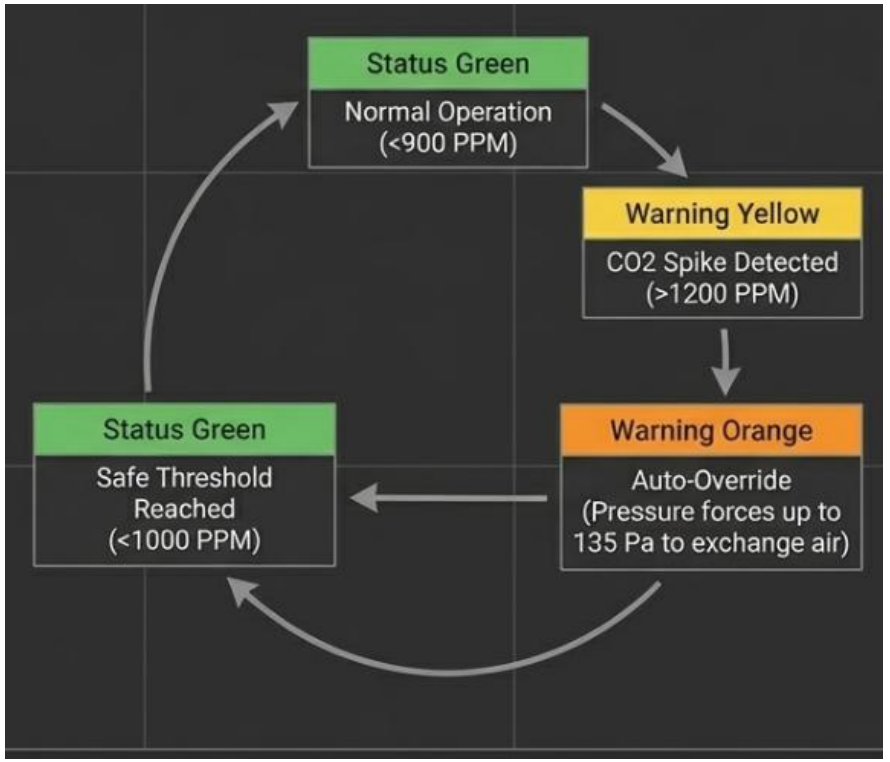

CLEANCAB
FILTRATION SYSTEMS

Bringing People Into the Loop. Companion App.

Real-time visibility, diagnostics, and service management directly from the CleanCab Companion App.

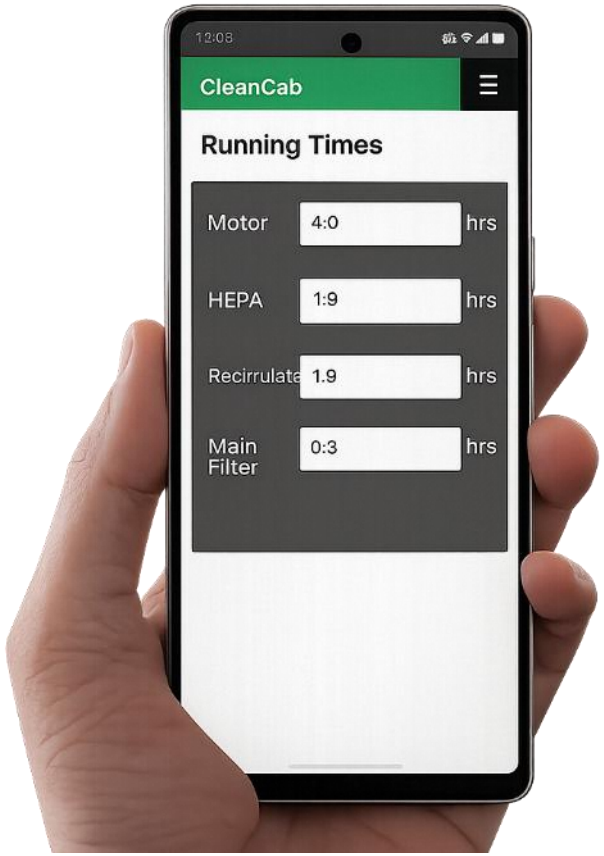

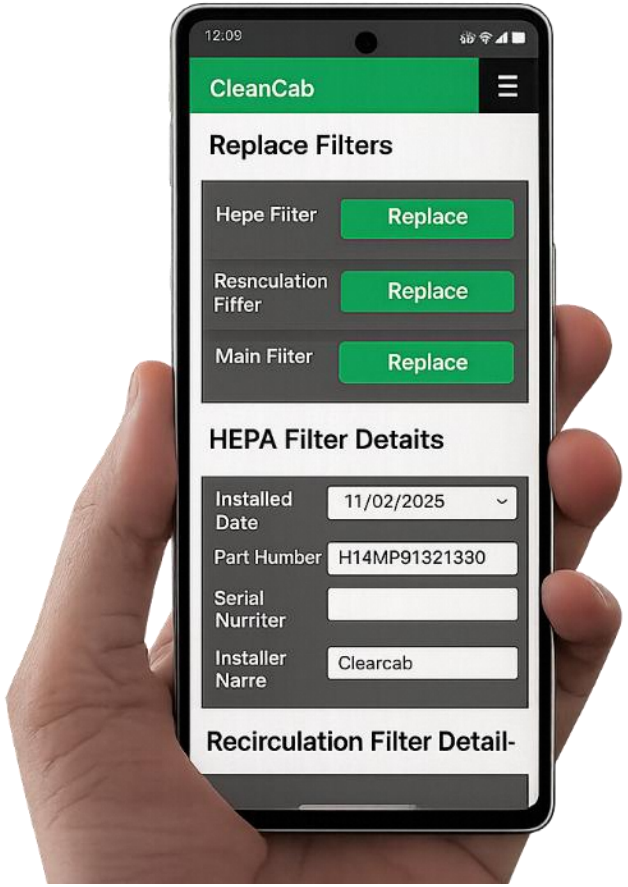

Dedicated Technician App Architecture

Advanced Bluetooth Control

Technicians can connect securely via the CleanCab Tech App to access advanced controller features, update firmware, and configure specific alarm thresholds.

Digital Filter Tracking

Eliminates the need for paper logbooks by allowing technicians to digitally input and track exact installation dates, part numbers, and run-hours for the Primary, HEPA, and Recirculation filters

Smart Diagnostics & Calibration

Automated Leak Testing: Technicians can execute a diagnostic "Check for Leaks" command from the app, temporarily forcing the pressuriser fan to 100% capacity to verify cabin seal integrity (achieving up to 60 Pa even with a 40mm leak).

Field Calibration: Features built-in tools to easily re-calibrate the highly sensitive CO_2 and cabin pressure sensors during routine yearly maintenance.

CLEANCAB
FILTRATION SYSTEMS

Digital integration. Data becomes auditable records

Beyond Hardware. The Air Quality lifecycle demands continues record keeping.
The CleanCab Companion app ensures that safety compliance is never overlooked and immediately available



Commissioning
App-based commissioning forms establish baseline installation report

Data Logging
App-based commissioning forms establish Export alarm history and performance data directly to CSV for audit-readiness.

Administrative Control
Authorised users can precisely adjust target pressures, override pressures, fine tune alarm thresholds and manage annual technician calibration.

CleanCab Air Safety System Engineered to ISO 23875

Sustained Positive Pressure
Maintains 35Pa positive pressure automatically

Active CO_2 Management
Automatically ramps pressure to 135Pa to rapidly flush air if CO_2 exceeds 1,200 ppm.

Tamper-Proof Controls
Critical alarm thresholds securely locked behind password-protected technician access.

Audit Ready
Continuous data logging replaces messy paper logs for seamless compliance auditing.

CLEANCAB
FILTRATION SYSTEMS

ISO 23875 REQUIREMENT	THE STANDARD SAYS	CLEANCAB COMPLIANCE
1. Pressure & Environmental Control		
Positive Pressurisation	Sustained pressure >20 Pa	✓ Preset target 35 Pa (adjustable), sustains automatically. Audible & visible alarm <20Pa
Maximum Pressure Limits	Alarms if pressure exceeds 200 Pa	✓ Triggers visual and audible alarms if <20Pa or >200 Pa
Active CO_2 Management	Monitor and alarm for high CO_2	✓ Exceeds standard: Automatically ramps pressure to 135 Pa at >1,200 PPM to rapidly flush air. (pressure over-ride to 135Pa adjustable)
Decay Time (Cabin Purge)	<2 minutes to reach safe breathing levels	✓ Automatic startup sequence ramps fan to 100% for 15–30s to flush cabin
Particulate Filtration & Tracking	Filters must prevent respirable particulate ingress	✓ Uses certified H14 HEPA filters; app dashboard tracks running hours for maintenance
2. Sensor Technology & Monitoring		
CO_2 Sensor Technology	NDIR sensor required	✓ NDIR, 0–5,000 PPM
Sensor Accuracy	±3% or better	✓ ±3% factory calibrated
Altitude Compensation	Required for elevated sites	✓ Built-in compensation
Continuous Monitoring	Always-on when running	✓ Auto-starts with ignition
Visual Display	Green / amber / red	✓ Colour-coded touchscreen
3. System Alarms & Security		
Alarm Thresholds	1,000 PPM & 2,500 PPM	✓ Factory set, app-adjustable
Secure Administrative Controls	Adjustment of thresholds must be restricted	✓ Target pressures are adjustable. Locked behind password-protected Service Admin / Technician access
4. Compliance, Testing & Maintenance		
Alarm History & Data Logging	Records must be kept	✓ App Stored, Export — CSV, audit-ready
Commissioning Documentation	Install record required	✓ App-based commissioning form & record keeping
Sensor Calibration	Regular calibration required	✓ Technician app, annual cycle
Leak & Performance Testing	Enclosures must be tested for integrity	✓ Dedicated app diagnostic runs fan at 100% capacity for rapid pressure/leak testing

The cost you see. And the cost you don't

Just like the iceberg adage, for some pressuriser units, the purchase price is the just the tip!

The Hidden financial drag comes back to filter intervals, motor life, fan pressure, service labour, and machine downtime. **Over your machine's lifecycle, the differences add up to thousands of dollars per unit**. This is the CleanCab advantage:

The Cab Pressuriser Holistic Iceberg

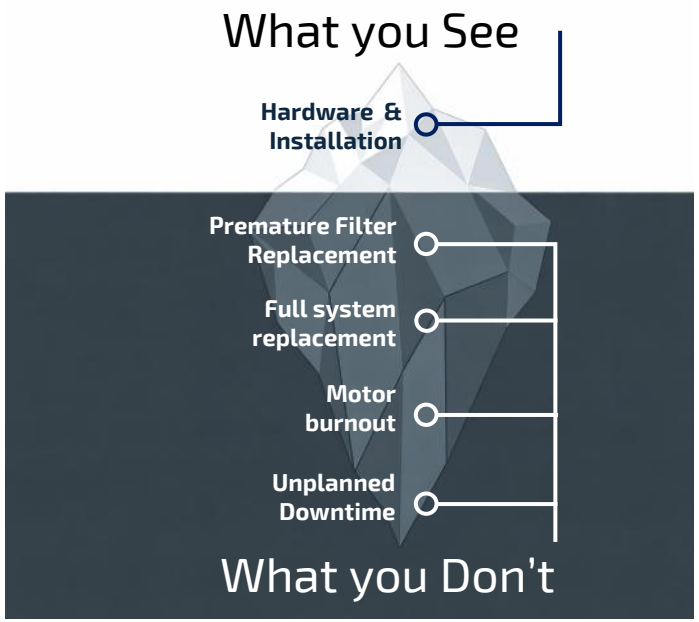

HIDDEN COSTS	INDUSTRY SYSTEMS	CLEANCAB ECOSYSTEM
Motor Lifespan	Frequent burnouts due to constant max-speed operation	10,000-hour rated, enclosed brushless motor (adaptive speed reduces wear).
HEPA Filter Efficiency	HEPA used as main filter unit, changed at 250hr intervals.	CleanCab uses the Powercore as primary, and the HEPA as the secondary filter. This means the primary filter get changed at 250hrs+. This then extends the life of the HEPA filter to 1000hrs. **Clean Cab HEPAs last 4 x longer! The cost difference of Powercore vs. the HEPA filter approx. $400, that is a huge saving !**
Maintenance Architecture	Sealed units requiring full system replacement on failure.	Modular design, allows only the failed parts of the system to be replaced, not the whole unit. Parts are stocked locally, ready to go.
Warranty Protection	~12 months typical	Comprehensive 2-Year Warranty

CLEANCAB
FILTRATION SYSTEMS

Customer Support. Built for the Long Run.

From installation through the life of your machine, CleanCab ensures you always have the support, parts, and knowledge to keep your cabin air system compliant and performing.

Need Parts? We've got it in stock!



We value serviceability, and our parts list that enables you to repair most parts of your unit (rather than change out expensive assemblies).

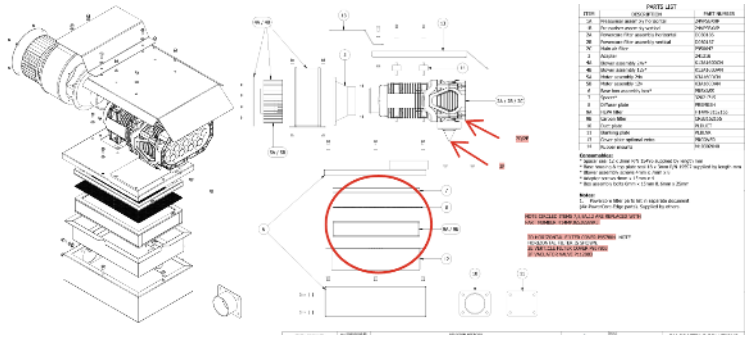

Support When You Need It

CleanCab supports customers and service partners with a complete digital toolkit. From troubleshooting guides and commissioning forms to firmware updates, manuals, and compliance certificates.

24/7 Help :
Troubleshooting guides, firmware updates available when you need them

Technician Support Forum:
A private online community administered by CleanCab to connect our network of installers

Digital Convenience:
Digital commissioning forms for fast and paperless set up

Procedures & Manuals:
Instant access to all installation, commissioning & operation and maintenance manuals

Test Certificates :
Digital Download your HEPA filter test certificate using the QR code on the filter.

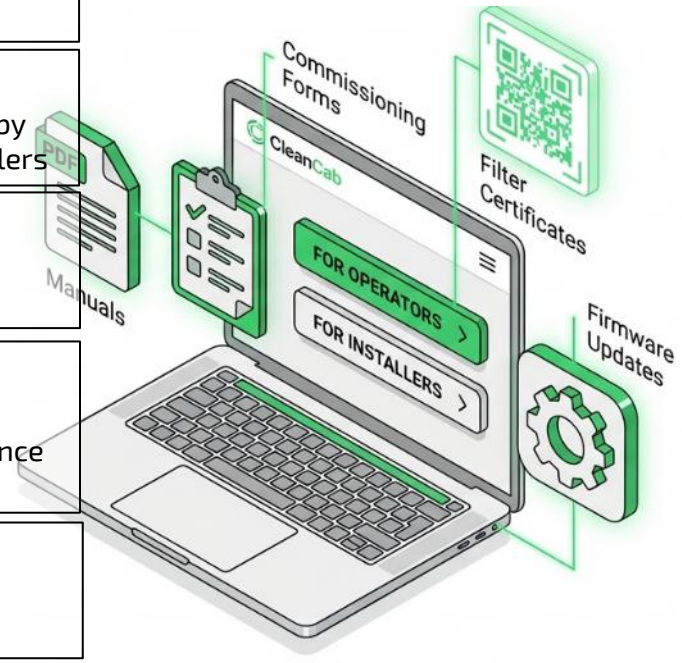

CLEANCAB
FILTRATION SYSTEMS