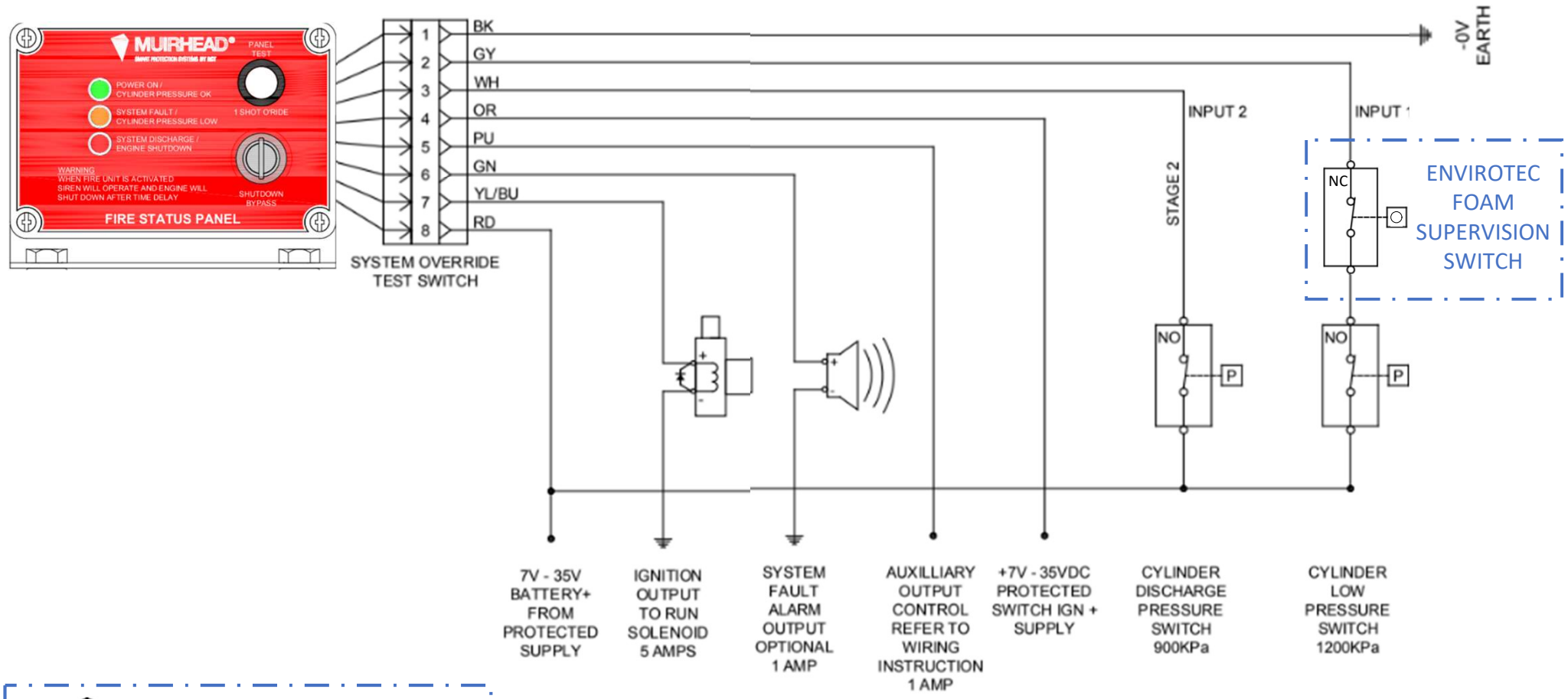
MUIRHEAD
PANEL TEST
POWER ON / CYLINDER PRESSURE OK
SYSTEM FAULT / CYLINDER PRESSURE LOW
1 SHOT O'RIDE
SYSTEM DISCHARGE / ENGINE SHUTDOWN
WARNING
WHEN FIRE UNIT IS ACTIVATED
SIREN WILL OPERATE AND ENGINE WILL
SHUT DOWN AFTER TIME DELAY
SHUTDOWN BYPASS
FIRE STATUS PANEL
1
2
3
4
5
6
7
8
BK
GY
WH
OR
PU
GN
YU/BU
RD
SYSTEM OVERRIDE TEST SWITCH
-0V EARTH
INPUT 2
INPUT 1
STAGE 2
NC
NO
P
ENVIROTEC FOAM SUPERVISION SWITCH
7V - 35V BATTERY+ FROM PROTECTED SUPPLY
IGNITION OUTPUT TO RUN SOLENOID 5 AMPS
SYSTEM FAULT ALARM OUTPUT OPTIONAL 1 AMP
AUXILLIARY OUTPUT CONTROL REFER TO WIRING INSTRUCTION 1 AMP
+7V - 35VDC PROTECTED SWITCH IGN + SUPPLY
CYLINDER DISCHARGE PRESSURE SWITCH 900KPa
CYLINDER LOW PRESSURE SWITCH 1200KPa
NOTE:
BOTH PRESSURE SWITCHES DRAWN WITH THE FIRE CYLINDER FULLY PRESSURISED

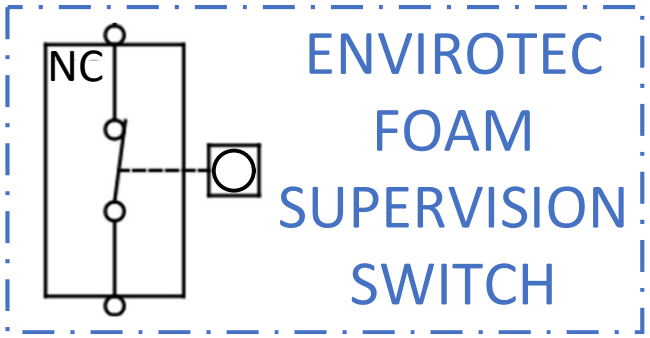
NC
ENVIROTEC FOAM SUPERVISION SWITCH